For Serial Nos.
220,000 thru 319,999
and
320,000 & higher

TURF RANGER

OPERATOR'S MANUAL

CONGRATULATIONS on the purchase of your new Exmark mower. This product has been carefully designed and manufactured to give you a maximum amount of dependability and years of trouble-free operation.

If additional information is needed, or should you require trained mechanic service, contact your authorized Exmark equipment dealer or distributor.

If you need to order replacement parts from your dealer, always give the model number and serial number of your mower as well as the part number, description and quantity of the part needed.

The Serial No. Plate for the tractor unit is located on the right hand rear surface of the engine deck below the fuel tank.

The Serial No. Plate for FMD523 and FMD603 is on the rear left hand top side of the deck plate next to the handle.

The Serial No. Plate for FMD524 and FMD604 is on the rear right belt cover support under the front frame.

For ease of ordering and reference, we suggest that you record the information requested in the following identification table.

Tractor Model No. _____

Tractor Serial No. _____

Deck Model No. _____

Deck Serial No. _____

Engine Model No. _____

Engine Serial No. _____

Date Purchased _____

Paste Label From
Literature Packet Here

⚠ WARNING

POTENTIAL HAZARD

- This product is a piece of power equipment.

WHAT CAN HAPPEN

- Failure to follow safe operating practices can result in serious operator injury or even death.

HOW TO AVOID THE HAZARD

- Keep all shields, guards, and safety devices (especially the grass discharge system) in place and in proper working condition.
- Stop engine and wait for all moving parts to stop. Remove spark plug wire(s) or remove key before adjusting, servicing, or performing maintenance.
- If mower deck becomes clogged, stop engine and wait for all moving parts to stop. Remove spark plug wire(s) or remove key before cleaning blockage.
- Keep hands, feet, and clothing away from power driven parts.
- Keep off mower unless seat platform is provided.
- Keep others off mower.

⚠ WARNING

POTENTIAL HAZARD

- Gasoline is harmful or fatal if swallowed. Long-term exposure to vapors has caused cancer in laboratory animals.

WHAT CAN HAPPEN

- Failure to use caution may cause serious injury or illness.

HOW TO AVOID THE HAZARD

- Avoid prolonged breathing of vapors.
- Keep face away from nozzle and gas tank/container opening.
- Keep away from eyes and skin.
- Never siphon by mouth.

IMPORTANT

When the mower is used or operated on any California forest, brush or grass covered land, a working spark arrester must be attached to the muffler. If not, the operator is violating state law, Section 4442 Public Resource Code. To acquire a spark arrester for your unit, see your Engine Service Dealer.

Exmark reserves the right to make changes or add improvements to its products at any time without incurring any obligation to make such changes to products manufactured previously. Exmark, or its distributors and dealers, accept no responsibility for variations which may be evident in the actual specifications of its products and the statements and descriptions contained in this publication.

EXMARK PARTS PLUS® PROGRAM

EFFECTIVE DATE: September 1, 1995

Program

If your Exmark dealer does not have the Exmark part in stock, Exmark will get the parts to the dealer the next business day or the part will be FREE* Guaranteed!!

How the Program Works

1. If dealer does not have part in stock for a "down" unit at the time of request by customer, the dealer contacts his distributor by 1:00 p.m., local time, and requests Exmark Parts Plus® shipment of six (6) line items or less.

2. Distributor ships part(s) to dealer or customer, as requested by dealer, same day, overnight UPS Distributor bills dealer for part and freight charges where applicable.

3. If distributor does not have the part(s) in stock to satisfy Exmark Parts Plus® order, he contacts Exmark by 3:00 p.m., central time, with an Exmark Parts Plus® order of six (6) line items or less.

4. If order is received by 3:00 p.m. central time, Exmark ships part(s) direct to dealer or customer, as requested by distributor, same day, overnight UPS, Exmark bills the distributor for parts and shipping charges, where applicable.

5. The customer pays for the <u>part</u> and <u>freight</u> if it is shipped under the Exmark Parts Plus® and if it arrives in accordance to the program.

6. Who pays for the <u>part</u> and <u>freight</u> if it fails to arrive overnight in accordance to the program?

   A. Under any circumstance the customer does not pay.

   B. If the part does not arrive overnight due to:

      1. The dealer not submitting the Exmark Parts Plus® order to his Exmark distributor by 1:00 p.m., the dealer pays for the part and freight.

      2. The Distributor being unable to ship the part the same day or not submitting the Exmark Parts Plus® order to Exmark by 3:00 p.m., central time, the Distributor pays for the part and freight.

      3. Exmark being unable to ship the part and the Exmark parts order is received by 3:00 p.m., central time, Exmark pays for the part and freight.

      4. If the part does not arrive overnight due to the shipper (UPS), the shipper pays for the freight and Exmark pays for the part.

<u>The following restrictions apply</u> -- The Exmark Parts Plus® Program is available only through participating Exmark Dealers and applies only to orders submitted on this program Monday through Thursday. Parts Plus service is available only in the 48 contiguous United States. UPS has initiated a Saturday delivery program to many areas of the continental United States and can be requested for an overnight shipment on Friday to be delivered Saturday. The next day air charge, plus the Saturday delivery fee will be the responsibility of the purchaser. Exmark Mfg. will assume no responsibility for Saturday delivery shipments. To qualify, all Exmark Parts Plus® orders must be received by Exmark by 3:00 p.m., central time. Orders must be six (6) line items or less. Exclusions from the Exmark Parts Plus® Program are: Any wholegood or accessory in its entirety, engines and engine replacement parts, 5-speed Peerless transmissions and 5-speed transaxles, hydraulic or hydrostatic wheel motors, cutter decks and engine decks or any item exceeding United Parcel Service size and weight restrictions.

Due to UPS restrictions, aerosol spray paint is considered a hazardous material and cannot be shipped via UPS next day or Second Day Air.

Exmark Manufacturing stocks a limited supply of parts for transaxles, pumps and wheel motors. These parts can be ordered for Next Day Air shipment but will not be guaranteed per the Parts Plus Program.

CONGRATULATIONS on the purchase of your Exmark Mower. This product has been carefully designed and manufactured to give you a maximum amount of dependability and years of trouble-free operation.

OPERATOR'S MANUAL

This manual contains assembly, operating, maintenance, adjustment, and safety instructions for your Exmark mower.

BEFORE OPERATING YOUR MOWER, CAREFULLY READ THIS MANUAL IN ITS ENTIRETY.

By following the operating, maintenance, and safety instructions, you will prolong the life of your mower, maintain its maximum efficiency, and promote safe operation.

If additional information is needed, or should you require trained mechanic service, contact your authorized Exmark equipment dealer or distributor.

All Exmark equipment dealers and distributors are kept informed of the latest methods of servicing and are equipped to provide prompt and efficient service in the field or at their service stations. They carry ample stock of service parts or can secure them promptly for you from the factory.

All Exmark parts are thoroughly tested and inspected before leaving the factory, however, attention is required on your part if you are to obtain the fullest measure of satisfaction and performance.

TABLE OF CONTENTS

1. SAFETY ..... PAGE
1.1 Safety Alert Symbol 1
1.2 Training 1
1.3 Preparation 1-3
1.4 Operation 4-5
1.5 Maintenance & Storage 6
1.6 Safety Signs 7-8

2. SPECIFICATIONS
2.1 Model Number 9
2.2 Engine 9
2.3 Fuel System 9
2.4 Electrical System 9
2.5 Operator Controls 9
2.6 Seat 9
2.7 Hydrostatic Ground Drive System 9-10
2.8 Tires 10
2.9 Deck 10
2.10 Dimensions 11

3. ASSEMBLY INSTRUCTIONS
3.1 to 3.8 Assembly 11-16

4. CONTROLS 16-17

5. OPERATION INSTRUCTIONS
5.1 Pre-Start 17
5.2 Mowing 17-18
5.3 Transporting 18-19

6. MAINTENANCE & ADJUSTMENTS
6.1 Periodic Maintenance 19-27
6.2 Adjustments 27-33

7. WASTE DISPOSAL
7.1 Motor Oil Disposal 33
7.2 Battery Disposal 33

8. TROUBLE SHOOTING
8.1 Mower Cuts Unevenly 33
8.2 Engine Will Not Start 34

9. WIRING DIAGRAMS 35

10. WARRANTY 36-37

1.SAFETY

1.1 SAFETY ALERT SYMBOL

This **SAFETY ALERT SYMBOL** ⚠ is used both in this manual and on the machine to identify important safety messages which must be followed to avoid accidents. This symbol means:

ATTENTION! BECOME ALERT!

YOUR SAFETY IS INVOLVED!

The safety alert symbol appears above information, which alerts you to unsafe actions or situations and will be followed by the word **DANGER**, **WARNING**, or **CAUTION**.

DANGER: Indicates an imminently hazardous situation which, if not avoided, **WILL** result in death or serious injury.

WARNING: Indicates a potentially hazardous situation which, if not avoided, **COULD** result in death or serious injury.

CAUTION: Indicates a potentially hazardous situation which, if not avoided, **MAY** result in minor or moderate injury.

1.2 TRAINING

1.2.1 Regard the Exmark mower as a piece of power equipment and teach this regard to all who operate this unit.

1.2.2 Read the instructions carefully. Familiarize yourself with the controls and the proper use of the equipment. If the operator(s) or mechanic(s) can not read English, it is the owner's responsibility to explain this material to them.

1.2.3 Do not allow operation of this machine by untrained personnel. Never allow children, teenagers, or people unfamiliar with these instructions to use the mower. Local regulations may restrict the age of the operator.

1.2.4 Avoid mowing while people, especially children, or pets, are nearby. Keep in mind that the operator or user is responsible for accidents or hazards occurring to other people or their property.

1.3 PREPARATION

1.3.1 Evaluate the terrain to determine what accessories and attachments are needed to properly and safely perform the job. Only use accessories and attachments approved by Exmark.

1.3.2 The use of personal protective equipment, such as (but not limited to) protection for the eyes, ears, feet, and head is recommended.

⚠ CAUTION
POTENTIAL HAZARD ♦ This machine produces sound levels in excess of 85 dBA at the operator's ear when in operation.
WHAT CAN HAPPEN ♦ Exposure to sound levels of 85 dBA or above for extended periods of time can cause hearing loss.
HOW TO AVOID THE HAZARD ♦ Wear hearing protection when operating this machine.

1.3.3 While mowing, always wear substantial footwear and long trousers. Do not operate equipment when barefoot or when wearing open sandals.

1.3.3 Thoroughly inspect the area where the equipment is to be used and remove all stones, sticks, wires, bones, and other foreign objects, which may damage the equipment or cause personal injury to the operator or bystanders.

1.3.4 Always set the park brake before starting the engine.

⚠ WARNING

POTENTIAL HAZARD

- Engine exhaust contains carbon monoxide, which is an odorless deadly poison.

WHAT CAN HAPPEN

- Carbon monoxide can kill you.

HOW TO AVOID THE HAZARD

- Do not run engine indoors or in a small confined area where dangerous carbon monoxide fumes can collect.

⚠ DANGER

POTENTIAL HAZARD

- In certain conditions gasoline is extremely flammable and highly explosive.

WHAT CAN HAPPEN

- A fire or explosion from gasoline can burn you, others, and cause property damage.

HOW TO AVOID THE HAZARD

- *DO NOT* smoke while refueling, and stay away from an open flame or where gasoline fumes may be ignited by spark.
- Refuel only outdoors.
- Store gasoline in an approved container and keep it out of the reach of children.
- Add fuel before starting the engine. *Never* remove the cap of the fuel tank or add fuel when engine is running or when the engine is hot.
- Never fill the fuel tank so that the gasoline level rises above a level that is 1/2” below the bottom of the filler neck to allow for gasoline expansion and prevent fuel spillage.
- If fuel is spilled, *DO NOT* attempt to start the engine. Move away from the area of the spill and avoid creating any source of ignition until fuel vapors have dissipated.

⚠ DANGER

POTENTIAL HAZARD

- In certain conditions gasoline is extremely flammable and highly explosive.

WHAT CAN HAPPEN

- A static charge can ignite gasoline vapors. A fire or explosion from gasoline can burn you, others, and cause property damage.

HOW TO AVOID THE HAZARD

- Purchase and store gasoline only in an approved container.
- Always place gasoline containers on the ground away from your vehicle before filling.
- Do not fill gasoline containers inside a vehicle or on a truck or trailer bed because interior carpets or plastic truck bed liners may insulate the container and slow the loss of any static charge.
- When practical, remove gas-powered equipment from the truck or trailer and refuel the equipment with its wheels on the ground.
- If this is not possible, then refuel such equipment on a truck or trailer from a portable container, rather than from a gasoline dispenser nozzle.
- If a gasoline dispenser nozzle must be used, keep the nozzle in contact with the rim of the fuel tank or container opening at all times until fueling is complete.

⚠ WARNING

POTENTIAL HAZARD

- Gasoline vapor can collect inside enclosed trailers and may be ignited by electrical sparks or hot engine/exhaust components.

WHAT CAN HAPPEN

- Explosion and fire may occur, resulting in property damage, personal injury, and/or death.

HOW TO AVOID THE HAZARD

- Provide adequate ventilation of any enclosed trailer to prevent build up of gasoline vapors, especially at floor level.
- Refuel only outdoors, never inside an enclosed trailer.
- Be sure all fuel tanks and gasoline storage containers have proper caps installed to prevent spillage and minimize vapor escaping into the trailer.
- Do not place any equipment that is leaking gasoline in an enclosed trailer.

1.4 OPERATION

Although hazard control and accident prevention are partially dependent upon the design and configuration of the equipment, these factors are also dependent upon the awareness, concern, prudence, and proper training of the personnel involved in the operation, transport, maintenance, and storage of the equipment. It is essential that all Operator Safety Mechanisms be connected and in operating condition prior to use for mowing.

⚠ WARNING
POTENTIAL HAZARD ♦ Operating engine parts, especially the muffler, become extremely hot.
WHAT CAN HAPPEN ♦ Severe burns can occur on contact. ♦ Debris, such as leaves, grass, brush, etc. can catch fire.
HOW TO AVOID THE HAZARD ♦ Allow engine parts, especially the muffler, to cool before touching. ♦ Remove accumulated debris from muffler and engine area. ♦ Install and maintain in working order a spark arrester before using equipment on forest-covered, grass-covered, or brush-covered unimproved land.

⚠ WARNING
POTENTIAL HAZARD ♦ Hands, feet, hair, clothing, or accessories can become entangled in rotating parts.
WHAT CAN HAPPEN ♦ Contact with rotating parts can cause traumatic amputation or severe lacerations.
HOW TO AVOID THE HAZARD ♦ Do not operate the machine without guards, shields, and safety devices in place and working. ♦ Keep hands, feet, hair, jewelry, or clothing away from rotating parts.

1.4.1 Give complete, undivided attention to the job at hand.

1.4.2 Mow only in daylight or good artificial light, keeping away from holes and hidden hazards. NEVER carry passengers. DO NOT operate the mower when children or others are in the area.

1.4.3 When feasible, avoid operating the equipment in wet grass.

1.4.4 Use **EXTREME** caution when mowing and/or turning on slopes as loss of control and/or tip over could occur. Drive slower on slopes. Progressively greater care is needed as the slope increases. ***DO NOT*** operate on slopes greater than 15 degrees. Watch for ditches, holes, rocks, dips, and rises which change the operating angle. Keep away from drop-offs and steep banks. Mow up and down slopes - not across. Mower tips more easily to the side than to the front or the rear. Avoid sudden starts and turns. Loss of control may occur going downhill - weight transfer may cause rear wheel to lift off and cause loss of steering. ***DO NOT*** mow slopes when grass is wet - slippery conditions affect steering and reduce traction and braking. The operator is responsible for safe operation on slopes. See inside back cover to determine the approximate slope of the area to be mowed.

1.4.5 Use **EXTREME** caution when backing up. **LOOK BEHIND YOU!**

1.4.6 Stop the blades when crossing surfaces other than grass and when transporting the mower to and from the area to be mowed.

1.4.7 Never operate the mower with defective guards, shields, or covers. Always have safety shields, guards, switches, and other devices in place and in proper working condition.

1.4.8 ***Do Not*** change the engine governor settings or overspeed the engine. Operating an engine at excessive speed may increase the hazard of personal injury.

1.4.9 Disengage PTO before starting engine.

1.4.10 Start the engine carefully with feet well away from the blades.

1.4.11 Keep hands, feet, and clothing away from rotating parts while the mower is being operated.

1.4.12 Stop the engine, wait for all moving parts to stop, and remove key:

a) Before checking, cleaning, or working on the mower.

b) After striking a foreign object (inspect the mower for damage and make repairs before restarting and operating the mower).

c) Before clearing blockages.

d) Whenever you leave the mower.

1.4.13 Stop the engine and wait for all moving parts to stop:

a) Before refueling.

b) Before making height adjustments.

c) Before dumping the grass catcher.

1.4.14 Before stopping the engine, place the throttle control midway between the “slow” and “fast” positions. Allow the engine to run a minimum of 15 seconds, then stop the engine.

1.4.15 The fuel system is provided with a shut-off valve. The fuel shut-off valve is used to shut off the fuel when:

a) The machine will not be used for a few days.

b) During transport to and from the job.

c) When parking inside a building.

1.4.16 This mower was designed for one operator only. Keep all others away from mower during operation.

1.4.17 ***Do Not*** mow without the discharge chute or entire grass collection system in place and in proper working condition.

1.4.18 Be aware of the mower discharge and direct discharge away from others.

1.4.19 Do NOT operate the mower under the influence of alcohol or drugs.

1.4.20 Use care when approaching blind corners, shrubs, trees, other objects that may obscure vision.

1.4.21 If jump starting is required:

a) Connect the positive (+) power cable from the positive post on the booster battery to the positive terminal post on the starter solenoid switch (this post has the positive battery cable attached to it).

b) Connect the negative or ground cable (-) to the negative post on the battery to any engine deck ground, preferably the engine block as far away from the battery as possible.

c) Disconnect battery cables in the reverse order after starting.

1.5 MAINTENANCE AND STORAGE

1.5.1 For engine maintenance, follow the engine manufacturer's recommendations precisely as stated in the engine manual.

1.5.2 Disconnect the battery cable form the negative battery post when the unit will be allowed to sit for more than 30 days without use.

1.5.3 Allowing batteries to stand for an extended period of time without recharging them will result in reduced performance and service life. To preserve optimum battery performance and life, recharge batteries in storage when the open circuit voltage drops to 12.4 volts.

NOTE: To prevent damage due to freezing, battery should be fully charged before putting away for winter storage.

1.5.4 Keep engine and engine area free from accumulation of grass, leaves, excessive grease or oil, and other debris, which can accumulate in these areas. These materials can become combustible and may result in a fire.

1.5.5 Store fuel in a container specifically designed for this purpose in a cool, dry place.

1.5.6 Keep the mower and fuel container in locked storage to prevent children from playing or tampering with them.

1.5.7 Gasoline powered equipment or fuel containers should not be stored in a basement or any enclosed area, where open pilot lights or heat appliances are present.

1.5.8 Maximum mowing results and safety can only be achieved if the mower is properly maintained and operated correctly.

1.5.9 Check all bolts frequently to maintain proper tightness.

1.5.10 Keep all guards, shields, and all safety devices in place and in safe working condition.

1.5.11 Frequently check for worn or deteriorating components that could create a hazard.

1.5.12 All replacement parts must be the same as or equivalent to the parts supplied as original equipment.

⚠ WARNING

POTENTIAL HAZARD

- Hydraulic fluid escaping under pressure can penetrate skin and cause injury.

WHAT CAN HAPPEN

- Fluid accidentally injected into the skin must be surgically removed within a few hours by a doctor familiar with this form of injury or gangrene may result.

HOW TO AVOID THE HAZARD

- Make sure all hydraulic fluid hoses and lines are in good condition an all hydraulic connections and fittings are tight before applying pressure to hydraulic system.
- Keep body and hands away from pinhole leaks or nozzles that eject high pressure hydraulic fluid.
- Use cardboard or paper, not your hands, to find hydraulic leaks.
- Safely relieve all pressure in the hydraulic system by letting the foot pedal return to neutral and shutting off the engine before performing any work on the hydraulic system.

1.6 SAFETY SIGNS

1.6.1 Keep all safety signs legible. Remove all grease, dirt, and debris from safety signs and instructional labels.

1.6.2 Safety signs must be replaced if they are missing or illegible.

1.6.3 When new components are installed, be sure that current safety signs are affixed to the replaced components.

1.6.4 New safety signs may be obtained from your authorized Exmark equipment dealer or distributor or from Exmark Mfg. Co. Inc.

1.6.5 Safety signs may be affixed by peeling off the backing to expose the adhesive surface. Apply only to a clean, dry surface. Smooth to remove any air bubbles.

1.6.6 Familiarize yourself with the following safety signs and instruction labels. They are critical to the safe operation of your Exmark commercial mower.

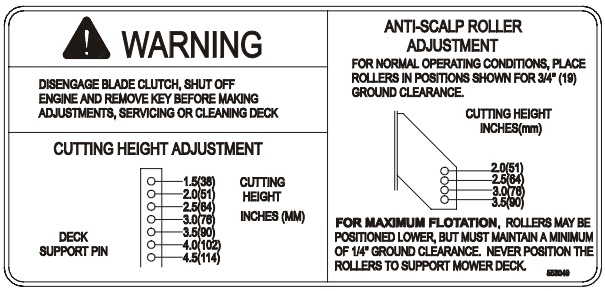

PART NO. 1-553049
LOCATION: On Top Front LH Surface of Mower Deck

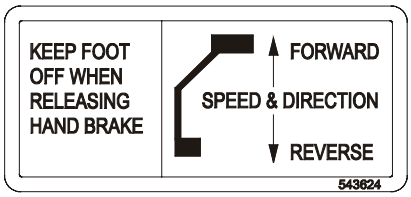

PART NO. 1-543624
LOCATION: Front Right Foot Support

PART NO. 103-2432
LOCATION: Left Side of Brake Lever

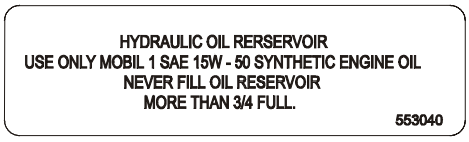

PART NO. 1-553040
LOCATION: Top Surface of Hydraulic Reservoir

PART NO. 1-513746
LOCATION: Surface of Engine Deck Next to Muffler

PART NO. 1-513747
LOCATION: Top Front of Battery Cover

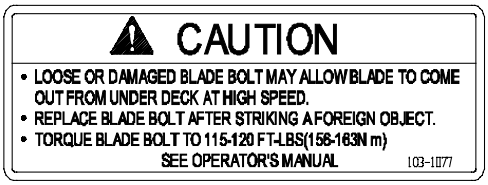

PART NO. 103-1077
LOCATION: Front RH Side of Mower Deck

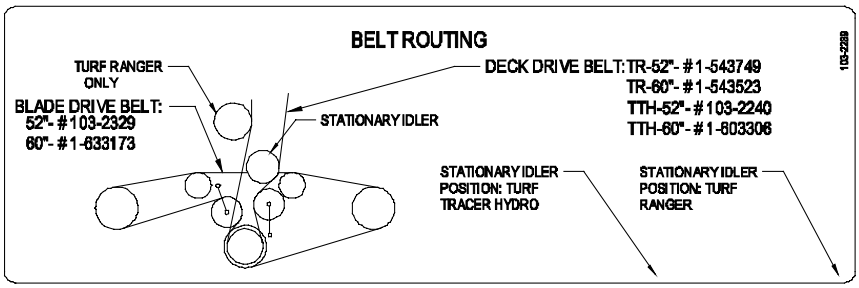

FMD524 & FMD604 units only
PART NO. 103-2239
LOCATION: Top of Mower Deck Beneath Center Shield

PART NO. 1-303508
LOCATION: On Top RH Surface of Mower Deck

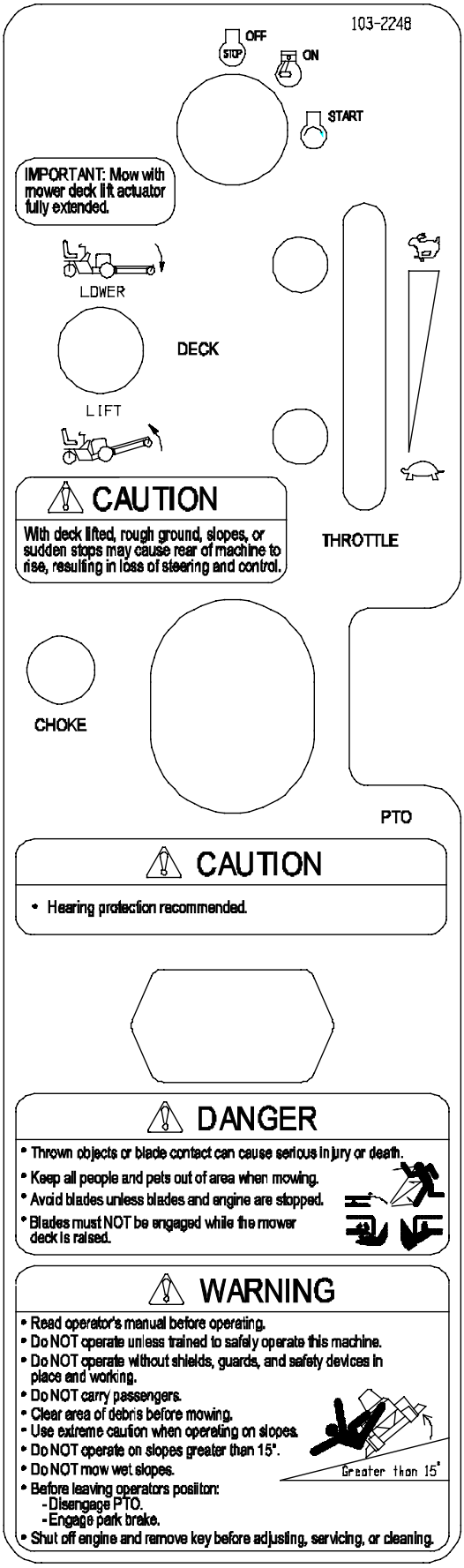

PART NO. 103-2248
LOCATION: Steering Console

PART NO. 1-303293
LOCATION: Top Surface of Fuel Tank

PART NO. 98-5954
LOCATION: Under Belt Shields

PART NO. 1-543620
LOCATION: On Intake Screen Below Fuel Tank

PART NO. 1-403005
LOCATION: LH & RH Front Top Surface of Mower Deck

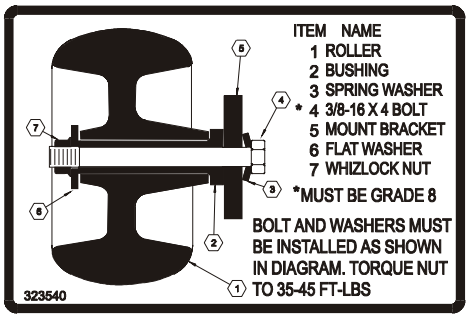

PART NO. 1-323540
LOCATION: Front of Mower Deck, Top Surface

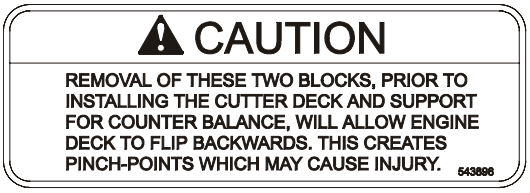

PART NO. 1-543896
LOCATION: Under Engine Deck on Wood Blocks for Shipping

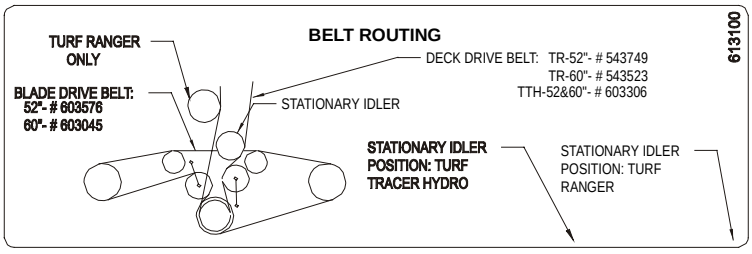

FMD523 & FMD603 units only
PART NO. 1-613100
LOCATION: Top of Mower Deck Beneath Center Shield

2. SPECIFICATIONS

2.1 Model Number: Serial Numbers 220,000 & Higher: TR23KC

2.2 ENGINE

2.2.1 Engine Specifications: See your engine owners manual.

2.2.2 3600 RPM (No Load)

2.3 FUEL SYSTEM

2.3.1 Capacity: 5.0 gal. (18.9 L.)

2.3.2 Type of Fuel: Regular unleaded gasoline 87 octane or higher. In countries using the research method, it should be a 90 octane *minimum*.

2.3.3 Fuel Filter: Replaceable in-line

2.3.4 Fuel Shut-Off Valve: 1/4 turn

2.4 ELECTRICAL SYSTEM

2.4.1 Charging System: Flywheel alternator

2.4.2 Charging Capacity: 15 amp Kohler Engine

2.4.3 Battery Type: BCI Group U1, 235 amps at 0° F

2.4.4 Battery Voltage: 12 Volt Polarity: Negative ground

2.4.5 Fuses: 20, and 30 amp blade type, 20 amp to charging circuit; 20 amp to electric clutch; 30 amp to electro-mechanical actuator.

2.4.6 Safety Interlock System: Operator must be positioned in the seat with PTO *disengaged* and brake *engaged* to start engine. Operator must be in seat when PTO is engaged or when brake is disengaged or the engine will stop.

2.5 OPERATOR CONTROLS

2.5.1 Steering Control: Aircraft-style steering yoke.

2.5.2 Motion Control: Single foot pedal operated by the right foot. Provides forward and reverse speed control with little effort. Motion control pedal and linkages are protected by the motion override device when the parking brake is engaged.

2.5.3 Parking Brake Lever: Engages park brake and locks drive system in neutral. Neutral lockout system prevents accidental engagement of drive system when park brake is engaged and protects hydro-transaxle from potential damage.

2.6 SEAT

2.6.1 Type: high back, foam padded (internal suspension) with standard arm rests.

2.6.2 Mounting: Attached to activate a seat switch and attached to a seat spring for maximum comfort over rough terrain. Adjustable fore and aft.

2.6.3 Armrests: foam padded flip-up armrests with height adjustment standard.

2.6.4 Seat Safety switch: Incorporated into the Safety Interlock System. Time delay seat switch eliminates rough ground cut-outs.

2.7 HYDROSTATIC GROUND DRIVE SYSTEM

2.7.1 Hydrostatic transmission: Eaton 851 transaxle with 23:1 reduction ratio.

2.7.2 Hydrostatic direction control system is protected by a neutral lockout system.

2.7.3 Hydraulic Oil Type: Synthetic Mobil 1 15W-50

2.7.4 Hydraulic Oil Capacity: 8.5 qts. (8.0 L.)

2.7.5 Filter: Replaceable cartridge type
Exmark P/N 513211: 10 micron, 18 psi bypass

2.7.6 Speeds: 0 - 6.4 mph (10.2 km/hr) forward
0 - 3.2 mph (5.1 km/hr) reverse

2.7.7 Drive wheel release lever allows machine to be moved when engine is not running.

2.8 TIRES

	Rear	Drive	Front Caster		
			SN 274,505 & lower	SN 274,506 – 319,999	SN 320,000 & Higher
Type	Pneumatic	Pneumatic	Pneumatic	Semi-Pneumatic	Pneumatic
Size	18 x 7.50-8	20 x 10.00-8	9 x 3.50-4	9 x 3.5-4	11 x 4-5
Quantity	1	2	2	2	2
Tread	Turfsaver	Turfmate	Smooth	Smooth	Smooth
Ply Rating	4	4	4	-	4
Pressure	14 psi (97 kPa)	20 psi (138 kPa)	22 psi (152 kPa)	-	16 psi (110 kPa)

2.9 MOWER DECK

2.9.1 Model Numbers: Serial Nos. 319,999 and lower: FMD603 and FMD523
Serial Nos. 320,000 and higher: FMD604 and FMD 524

2.9.1 Cutting Width: 60 in. (152.4 cm.)
52 in. (132.1 cm.)

2.9.2 Discharge: Right Side

2.9.3 Optional Mulch Kit and Bagger available.

2.9.4 Blade Size: 60" - (3 ea.) 20.50 in. (52.1 cm.)
52" - (3 ea.) 18.00 in. (45.72 cm.)

2.9.5 Type of Drive: Electric clutch mounted on engine shaft. Blades driven by two belts with self tensioning idlers.

2.9.6 Adjustable anti-scalp rollers (6 ea.)

2.9.7 Cutting Height: Adjusts in 1/2” (1.3 cm) increments from 1 1/2” (3.8 cm) to 4 1/2” (11.5 cm).

2.9.8 Deck Mounting: Full floating deck is attached to out-front support frame. Removable for servicing. Can be raised by one-touch electro-mechanical ball screw deck lift system for servicing and cleaning or to transfer weight to drive wheels which aides in climbing hills.

2.10 DIMENSIONS

2.10.1 Overall Width

	without deck	*deflector up*	*deflector down*
Turf Ranger with FMD523	49.9” (126.8 cm)	53.4” (135.6 cm)	63.1” (160.3 cm)
Turf Ranger with FMD524	49.9” (126.8 cm)	53.4” (135.6 cm)	64.2” (163.1 cm)
Turf Ranger with FMD603	49.9” (126.8 cm)	61.4” (156.0 cm)	71.0” (180.3 cm)
Turf Ranger with FMD604	49.9” (126.8 cm)	61.4” (156.0 cm)	72.2” (183.4 cm)

2.10.2 Overall Length

	without deck	*with deck*
Turf Ranger with FMD523	70.2” (178.3 cm)	109.0” (276.9 cm)
Turf Ranger with FMD524	70.2” (178.3 cm)	112.4” (285.5 cm)
Turf Ranger with FMD603	70.2” (178.3 cm)	108.4 (275.3 cm)
Turf Ranger with FMD604	70.2” (178.3 cm)	112.4” (285.5 cm)

2.10.3 Curb Weight:

Turf Ranger with FMD523	926 lbs. (420 kg)
Turf Ranger with FMD524	931 lbs. (422 kg)
Turf Ranger with FMD603	958 lbs. (435 kg)
Turf Ranger with FMD604	972 lbs. (441 kg)

2.10.4 Overall Height: 44.0” (111.8)

2.10.5 Wheel Base: 50.5” (128.3 cm)

2.10.6 Tread Width (drive wheels): 39.75” (101 cm)

3. ASSEMBLY INSTRUCTIONS

3.1 Uncrate tractor and mower deck.

3.2 Service battery:

WARNING: Battery posts, terminals, and related accessories contain lead compounds, chemicals known to the State of California to cause cancer and reproductive harm. **Wash hands after handling.**

For Serial Nos. 252,000 and higher.
The machine is shipped with a filled lead acid battery.

3.2.1 Remove battery cover from machine.

DANGER

POTENTIAL HAZARD
- Charging the battery may produce explosive gasses

WHAT CAN HAPPEN
- Battery gasses can explode causing serious injury.

HOW TO AVOID THE HAZARD
- Keep sparks, flames, or cigarettes away from battery.
- Ventilate when charging or using battery in an enclosed space.
- Make sure venting path of battery is always open once battery is filled with acid.

3.2.2 Check the voltage of the battery with a digital voltmeter. Locate the voltage reading of the battery in the table below and charge the battery for the recommended time interval to bring the charge up to a full charge of 12.6 volts or greater.

IMPORTANT: Make sure the negative battery cables are disconnected and the battery charger used for charging the battery has an output of 16 volts and 7 amps or less to avoid damaging the battery (see chart below for recommended charger settings).

Voltage Reading	Percent Charge	Maximum Charger Settings	Charging Interval
12.6 or greater	100%	16 volts/7 amps	No Charging Required
12.4 – 12.6	75 – 100%	16 volts/7 amps	30 Minutes
12.2 – 12.4	50 – 75%	16 volts/7 amps	1 Hour
12.0 – 12.2	25 – 50%	14.4 volts/4 amps	2 Hours
11.7 – 12.0	0 – 25%	14.4 volts/4 amps	3 Hours
11.7 or less	0%	14.4 volts/2 amps	6 Hours or More

CAUTION

POTENTIAL HAZARD
- If the ignition is in the “ON” position there is potential for sparks and engagement of components.

WHAT CAN HAPPEN
- Sparks could cause an explosion or moving parts could accidentally engage causing personal injury.

HOW TO AVOID THE HAZARD
- Be sure ignition switch is in the “OFF” position before charging the battery.

3.2.3 Connect the negative battery cables.

NOTE: If the positive cable is also disconnected, connect the ***positive (red) cable*** to the positive terminal on the battery ***first***, then connect the negative (black) cable to the negative terminal on the battery. Reinstall insulator boots. Reinstall battery cover.

NOTE: If time does not permit charging the battery, or if charging equipment is not available, connect the negative battery cables and run the vehicle continuously for 20 to 30 minutes to sufficiently charge the battery.

PART NO. 1-513747 LOCATION: Battery Cover

For Serial Nos. 251,999 and lower.

Machine is shipped with a dry battery.

3.2.4 Remove battery cover from machine. Disconnect the battery cables (negative (black) cable first) and lift the battery out.

3.2.5 Place battery on a level surface and remove vent caps.

DANGER

POTENTIAL HAZARD
- Battery electrolyte contains sulfuric acid, which is poisonous and can cause severe burns

WHAT CAN HAPPEN
- Swallowing electrolyte can be fatal or if it touches skin can cause severe burns.

HOW TO AVOID THE HAZARD
- Wear safety glasses to shield eyes, and rubber gloves to protect skin and clothing when handling electrolyte.
- Do not swallow electrolyte.
- Fill the battery where clean water is available for flushing skin.

DANGER

POTENTIAL HAZARD
- Charging the battery may produce explosive gasses

WHAT CAN HAPPEN
- Battery gasses can explode causing serious injury.

HOW TO AVOID THE HAZARD
- Keep sparks, flames, or cigarettes away from battery.
- Ventilate when charging or using battery in an enclosed space.
- Make sure venting path of battery is always open once battery is filled with acid.

3.2.6 Fill cells with battery grade sulfuric acid (1.265 specific gravity). Fill until halfway between top of separators and bottom of vent well.

3.2.7 Let the battery stand for 1/2 hour after filling. If battery acid level has fallen, refill to level above plates.

3.2.8 Charge the battery at 4 to 5 amps for 3-5 hours.

3.2.9 After charging, install vent caps and wash off any acid with water and dry battery.

⚠ CAUTION
POTENTIAL HAZARD ♦ If the ignition is in the “ON” position there is potential for sparks and engagement of components.
WHAT CAN HAPPEN ♦ Sparks could cause an explosion or moving parts could accidentally engage causing personal injury.
HOW TO AVOID THE HAZARD ♦ Be sure ignition switch is in the “OFF” position.

3.2.10 Install battery in machine. Connect cables to terminal posts, positive (red) cable to the positive battery terminal first, then negative (black) cable to the negative battery terminal. Reinstall battery cover.

NOTE: If time does not permit charging the battery, or if charging equipment is not available, follow steps 3.2.4 through 3.2.7 and install as described in 3.2.10. Then run the vehicle continuously for 20 to 30 minutes to sufficiently charge the battery.

⚠ WARNING	E513747
BATTERY CONTAINS SULFURIC ACID, AVOID CONTACT AND ALWAYS SHIELD EYES, FACE, SKIN AND CLOTHING FROM BATTERY. CIGARETTES, FLAMES OR SPARKS COULD CAUSE BATTERY TO EXPLODE. DO NOT CHARGE	OR USE BOOSTER CABLES OR ADJUST POST CONNECTIONS WITHOUT PROPER TRAINING. IN EVENT OF AN ACCIDENT FLUSH WITH WATER AND CALL A PHYSICIAN IMMEDIATELY. KEEP OUT OF REACH OF CHILDREN.

3.3 Remove seat cushion from seat frame. Remove seat frame from crate and discard mounting hardware. Mount seat to unit using two 5/16-18 x 3/4” bolts, two 3/8 flat washers and whizlock nuts from bolt bag in front two holes. Install flat washers between seat frame and seat rails. Mount seat to two rear bolts (which have springs on them), by removing the top whizlock nuts, installing seat frame, and replacing nuts. Reinstall cushion to seat frame.

3.4 Mount the rear tire and wheel assembly with a 5/8-11 x 10-1/2” bolt and torque nut. Tighten torque nut just enough to create a slight drag on the wheel while the wheel is being rotated. Inflate tire to 14 psi (95 kPa).

3.5 Mount both drive wheels securing them with four (4) wheel nuts each. Inflate tires to 20 psi (138 kPa).

3.6 Install steering handle bar with two 3/8-16 x 1-1/4” bolts and two 3/8 spring disc washers.

3.7 Install mower deck to tractor.

NOTE: ***Turf Ranger S/N 319,999 and lower*** fit FMD 523, 603, 524, or 604 decks (Kit 103-2250 is required with 524 and 604).

Turf Ranger S/N 320,000 and higher fit FMD 523, 603, 524, or 604 decks (No kit required).

3.7.1 Rotate drive wheel release lever into position shown in Figure 4 to release drive system (Refer to Section 4.11). Roll tractor to mower deck and mower deck support aligning them so the tractor is positioned for ease of mounting the deck support. Remove center belt shield.

3.7.2 Remove mower deck support frame from mower deck by removing the two hairpins and spacers from the front deck support pins and remove the hairpins and spacers from the rear deck support pins.

3.7.3 Lift up on support frame until it clears the support pins. Position support frame so the arms are on each side of the tractor engine deck and secure.

***For FMD523 and 603 units*:** Secure using eight (8) 3/8-16 x 1” bolts, disc spring washers, and whizlock nuts.

NOTE: Place spring washer cone against bolt head and install with the whizlock nut to the ***inside of engine deck*** for the two ***rear*** holes on both sides. Install whizlock nut to the ***outside*** for the two ***front*** bolt holes on each side of the ***mower deck support frame*** (See Figure 1). Tighten until spring washers are flat.

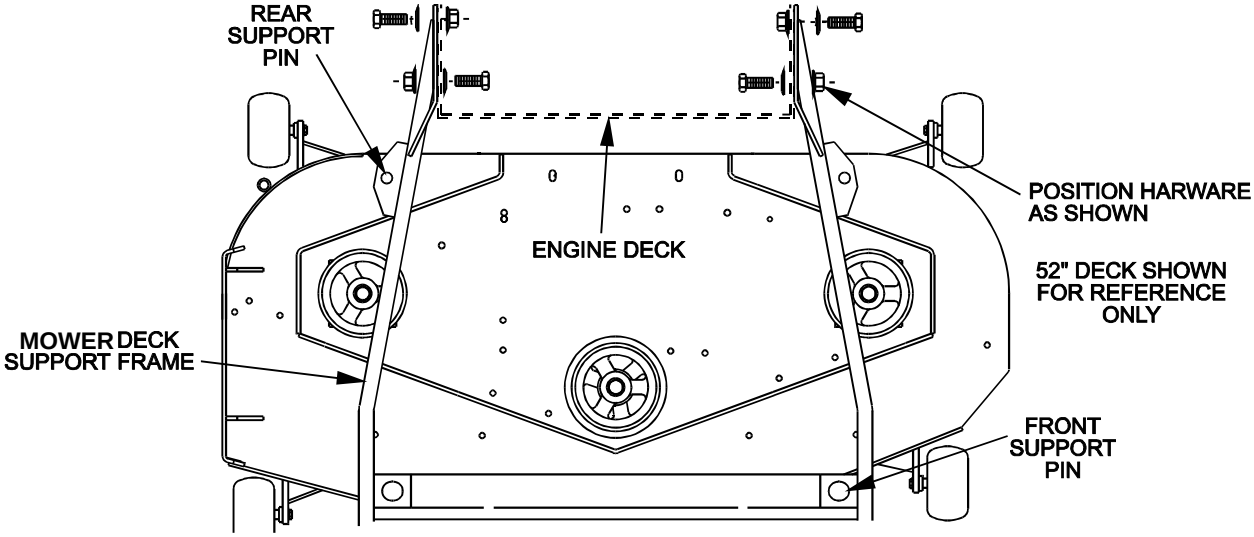

FIGURE 1
HARDWARE AND SUPPORT PIN
LOCATION FOR DECK SUPPORT FRAME

For FMD524 and 604 units: Secure using eight (8) 3/8-16 x 1 1/4” bolts, disc spring washers, and whizlock nuts.

NOTE: Place spring washer cone side against bolt head (cupped side away from head) and install to outside of support frame (as shown in Figure 2). Install with whizlock nuts to the inside of engine deck. Tighten until spring washers are flat.

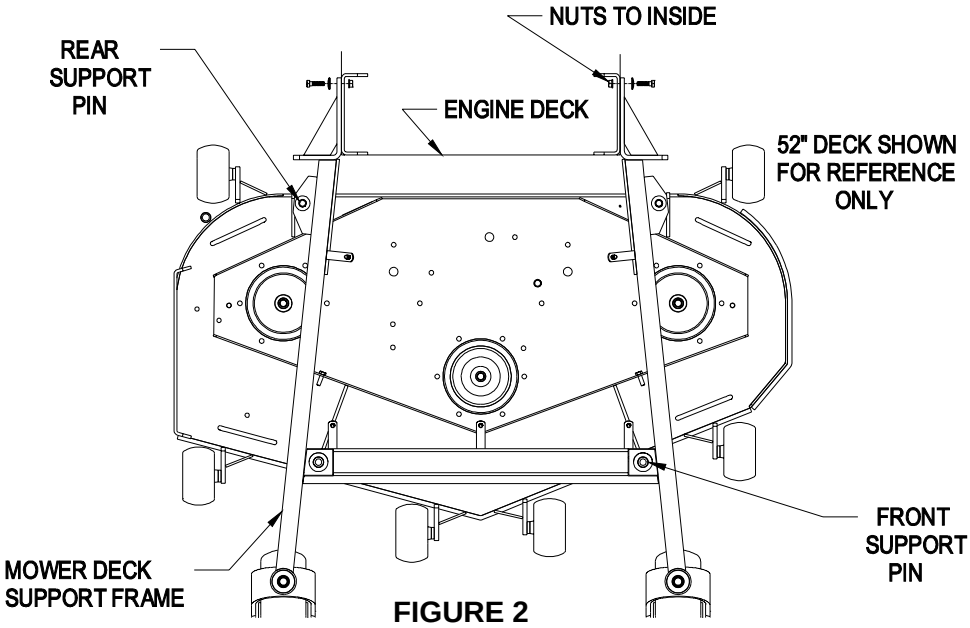

FIGURE 2
HARDWARE AND SUPPORT PIN
LOCATION FOR DECK SUPPORT FRAME

3.7.4 Position tractor, with mower deck support frame in place, over the mower deck. Align support frame above mower deck and position it so the support pins on the deck align with the mounting holes in the support frame. Lower support frame onto deck and Reinstall the two hairpins and spacers on the front support pins and the two hairpins and spacers onto the rear support pins (See Figure 1).

3.7.5 After the mower deck support frame and the attached mower deck are in place, it is necessary to remove the two wooden blocks under the engine deck pivot stops.

⚠ CAUTION
POTENTIAL HAZARD ♦ Removing the two blocks prior to installing the mower deck and support for counter balance will allow the engine deck to flip backwards.
WHAT CAN HAPPEN ♦ If the engine flips backwards pinch points are created, which may cause injury.
HOW TO AVOID THE HAZARD ♦ Keep hands clear from the engine deck when removing the blocks.

3.7.6 Install mower deck stationary idler. Idler components are located in the Turf Ranger bolt bag.

Note: To install a FMD 524 or 604 stationary idler to a Turf Ranger unit S/N 319,999 and lower, kit 103-2250 is also required. Follow the instructions in the kit.

Locate two holes along the back center section of the mower deck. Install the stationary idler and related parts in the left hand hole location as shown in Figure 3. See the belt routing decal on deck. Be sure the coned end of the disc spring is against the head of the bolt as illustrated (See Figure 3).

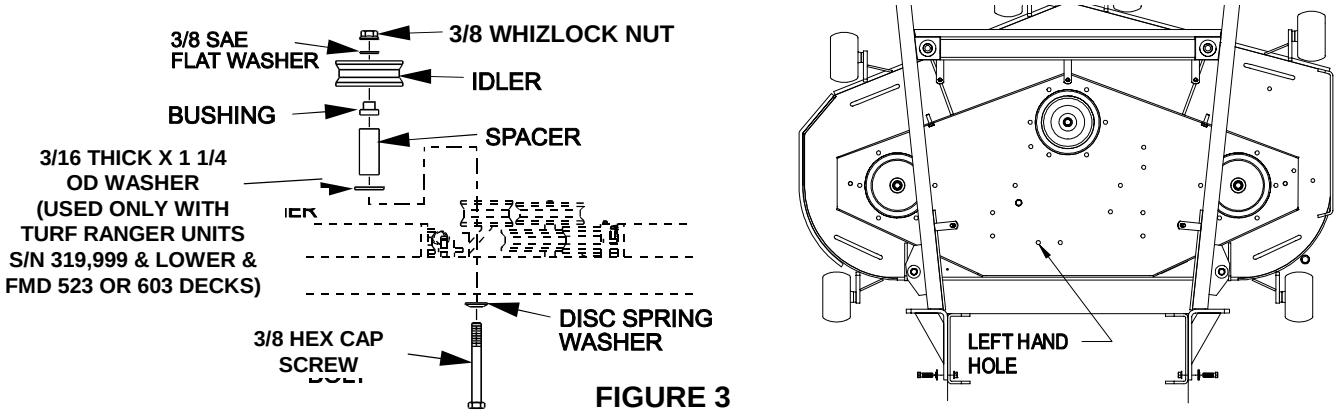

FIGURE 3
IDLER PULLEY KIT AND LOCATION

3.7.7 Install mower deck drive belt.

NOTE: Make sure to use proper belt for your deck. The belt (Part #1-543523) that is installed on the unit is for 60”decks only. For 52” decks, the belt (Part #1-543749) from the bolt bag must be used. Refer to belt routing decal on deck. Slip belt between clutch drive sheave and drive wheel release rod (make sure belt is in the sheave groove).

Install the deck drive belt around the clutch. Refer to belt routing decal. Be sure belt is in the clutch drive sheave groove. Place the other end of the belt into the V-groove of the stationary idler, move the spring loaded idler outward and route the belt around the inside of the spring loaded idler. Position the belt into the V-groove of the mower deck drive sheave. ***Carefully*** release the spring loaded idler. Install the center belt shield.

3.7.8 Adjust cutting height of deck and anti-scalp rollers. (See Section 6.2.1.)

3.8 Service engine: See Engine Operator's Manual.

4. CONTROLS

Familiarize yourself with all controls before operating the mower.

4.1 Steering Handle Bar: Located in center of steering console in front of operator's seat. During forward operation of the machine, movement of the steering handle to the right will cause the machine to turn to the right and vice versa. The steering system is chain connected from the steering shaft sprocket to the yoke sprocket. The chain has two adjustable connectors.

4.2 Motion Control Pedal: Located on the right side of steering console. The foot pedal controls the forward and reverse operation with foot motion. To increase forward speed press front pedal down until desired speed is obtained, to increase reverse speed press back pedal down until desired speed is obtained. Movement of the front pedal down will cause the machine to go forward. To stop forward travel, remove foot from pedal. The neutral centering device moves the motion pedal back to the neutral position.

For reverse motion, place foot heel on the rear pedal pad and press downward. Remove foot from pedal to stop reverse motion. The pedal automatically returns to neutral. When parking brake is engaged, the motion control pedal can be moved but will not function.

4.3 Electro-mechanical deck lift control: Switch is located on left side of control console. Moving the toggle switch lever forward will lower the cutting deck. Moving the lever backward will raise the deck. Normal operation is with the actuator fully extended. The actuator has an internal clutch to protect it from excessive loads. When raising or lowering the deck and the actuator has reached it's limit, a ***"ratcheting"*** sound is heard. When this ratcheting sound is heard, release switch lever, momentarily reverse switch to move actuator just off the fully extended or retracted position.

4.4 PTO Engagement: Located on right side of control console. The switch must be **pulled out** to the "**Rotate**" position to engage the blades. The switch is **pushed in** to the "**Stop**" position to stop the blades. Operator must be in the seat when blades are engaged or engine will stop.

4.5 Choke Control: Located on the left side of the control console. The choke control is used to aid in starting a cold engine. The choke control is **pulled out** to be in the "**ON**" position and **pushed in** to be in the "**OFF**" position. **DO NOT** run a warm engine with the choke in the "**ON**" position.

4.6 Throttle Control: Located on the control console right side. Throttle is used to control engine speed. Moving throttle control ahead will increase engine speed and moving it to the rear will decrease engine speed.

4.7 Park Brake Lever: Located ahead and near the right side of control console. Park brake lever engages a parking brake on the drive wheels and also locks the hydrostatic drive system in neutral. Moving the lever rearward will engage the brake. To disengage brake, lift finger latch and move brake ahead. Operator must be in the seat when brake is disengaged or engine will stop.

4.8 Ignition Switch: Located on the control console just ahead of the steering handle. The ignition switch is used to start and stop the engine. The switch has three positions "OFF", "ON" and "START". Insert key into switch and rotate to the right to the "ON" position. Rotate clockwise to the next position to engage the starter (key must be held against spring pressure in this position). Operator must be in seat with *brake engaged* and *PTO disengaged* to start engine. When engine starts, release key. ***DO NOT*** leave key in the "ON" position without engine running, this will run down the battery.

4.9 Hour Meter: Located on the steering console just below the steering wheel. The hour meter is connected to a pressure switch installed in the engine block and it records the number of hours that the engine has run. If ignition switch is left on without engine running, hour meter will not run.

NOTE: This switch is not a low oil sensor and will not alert the operator if the engine oil is low.

4.10 Fuel Shut-Off Valve: Located in the fuel line near the right rear corner of the engine. The fuel shut-off valve is used to shut off the flow of fuel when parking inside a building, during transportation to and from job sites and when the machine will not be used for a few days. Rotate valve 1/4 turn clockwise to shut fuel off. Rotate valve 1/4 turn counter-clockwise to turn fuel on.

4.11 Drive Wheel Release Lever: Located under the lower left rear corner of the engine deck (See Figure 4). The drive wheel release lever is used to release the hydrostatic drive system to allow machine to be pushed while the engine is not running. Rotate lever 1/8 turn counter-clockwise until caught under spring latch to release drive system. Pull spring latch out far enough to allow lever to rotate 1/8 turn clockwise to engage drive system.

NOTE: Do Not tow machine or transmission damage may result.

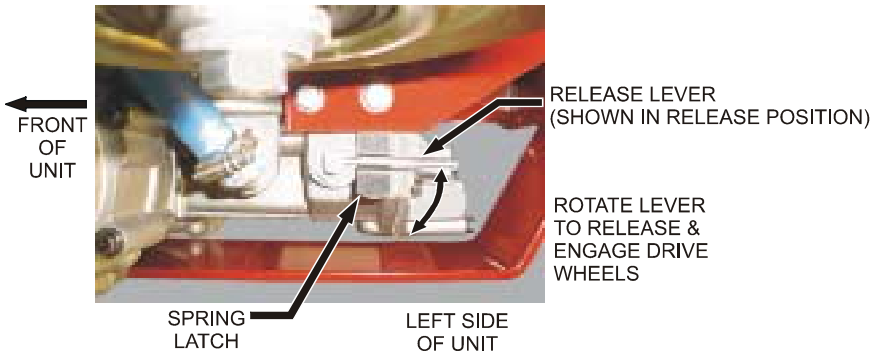

FIGURE 4
DRIVE WHEEL RELEASE LEVER

5. OPERATION INSTRUCTIONS

5.1 PRE-START

5.1.1 Fill fuel tank. For best results use only clean, fresh regular grade unleaded gasoline with an octane rating of 87 or higher. Regular grade *leaded* gasoline may also be used; however, combustion chamber and cylinder head will require more frequent service. See Engine Owner's Manual.

Note: Fuel tank may appear loose at set-up, however, once fuel is added, tank will slowly expand to fit tank straps.

Do not add oil to gasoline.

Never fill the fuel tank so that the fuel level rises above a level that is 1/2” below the bottom of the filler neck to allow for fuel expansion and prevent fuel spillage.

5.1.2 Make sure you understand the controls, their locations, their functions, and their safety requirements.

5.1.3 Refer to the Maintenance Section, and perform all of the necessary inspection and maintenance steps.

5.2 MOWING

5.2.1 Starting Engine: Operator must be in the seat with the parking brake *engaged* and the PTO *disengaged*.

Open fuel shut-off value.

On a cold engine, place the throttle midway between the "SLOW" and "FAST" positions and place the choke in the "ON" position. On a warm engine, place the throttle midway between the "SLOW" and "FAST" positions and leave the choke in the "OFF" position.

Turn ignition switch to "START" position. Release the switch as soon as the engine starts.

After starting a cold engine, gradually return choke to the "OFF" position after engine warms up.

IMPORTANT: Do not crank the engine continuously for more than ten (10) seconds at a time. If the engine does not start, allow a 60 second starter cool-down period between starting attempts. Failure to follow these guidelines can burn out the starter motor.

5.2.2 Stopping Engine: Bring unit to a full stop. Disengage the PTO and engage the park brake.

Before stopping the engine, place the throttle control midway between the “slow” and “fast” positions. Allow the engine to run a minimum of 15 seconds; then stop the engine.

Rotate ignition switch to “OFF” position. Remove the key to prevent children or other unauthorized persons from starting engine.

Close fuel shut-off valve when machine will not be used for a few days, when transporting, and when the unit is parked inside a building.

5.2.3 Engaging PTO: The PTO switch engages the cutting blades. Be sure that all persons are clear of mower deck and discharge area before engaging the PTO.

IMPORTANT: Operator must be in seat before the PTO can be engaged.

Set throttle to "midway" position. The switch must be pulled out to the "ROTATE" position to engage the blades. Accelerate to full throttle to begin mowing.

5.2.4 Stopping PTO: Set throttle to “idle” position. Push in on the switch to the “Stop” position to stop the blades.

5.3 TRANSPORTING

5.3.1 Transporting a Unit: Use a heavy duty trailer to transport the machine. When the machine is on the trailer lower the cutting deck and fully extend the actuator. Never transport machine with mower deck supported by actuator, damage to the actuator or other components may occur. Engage the park brake and block the wheels. Securely fasten the machine to the trailer or truck with straps, chains, cables, or ropes. Be sure that the trailer or truck has all necessary lighting and marking as required by law. Secure to trailer with a safety chain.

5.3.2 Loading a Unit: Use caution when loading units on a trailer or truck. Use actuator to lift cutting deck off of the ground to provide more traction on the drive tires while loading the unit. One full width ramp that is wide enough to extend beyond the drive tires is recommended. If it is not possible to use one full width ramp, multiple ramps may be used, but should be spaced close enough together to simulate a full width ramp. Drive forward to load and drive backward to unload from a trailer. **Do not** drive backward to load or drive forward to unload a trailer.

Ramp should be long enough so that the angles between the ramp and the ground and the ramp and the trailer or truck do not exceed 15°. After unit is loaded on the trailer lower the cutting deck and fully extend actuator for transport.

⚠ CAUTION
POTENTIAL HAZARD ♦ This unit does not have proper turn signals, lights, reflective markings, or a slow moving vehicle emblem. These items are required to drive on a public street or roadway.
WHAT CAN HAPPEN ♦ Driving on a street or roadway without such equipment is dangerous and can lead to accidents causing personal injury. ♦ Driving on a street or roadway without such equipment may also be a violation of State laws and the operator may be subject to traffic tickets and/or fines.
HOW TO AVOID THE HAZARD ♦ Do not drive a unit on a public street or roadway.

6. MAINTENANCE & ADJUSTMENTS

⚠ WARNING
POTENTIAL HAZARD ♦ If you leave the key in the ignition switch, someone could start the engine.
WHAT CAN HAPPEN ♦ Accidental starting of the engine could seriously injure you or other bystanders.
HOW TO AVOID THE HAZARD ♦ Remove the key from the ignition switch and pull the wire(s) off the spark plug(s) before you do any maintenance. Also push the wire(s) aside so it does not accidentally contact the spark plug(s).

⚠ WARNING
POTENTIAL HAZARD ♦ The engine can become very hot.
WHAT CAN HAPPEN ♦ Touching a hot engine can cause severe burns.
HOW TO AVOID THE HAZARD ♦ Allow the engine to cool completely before service or making repairs around the engine area.

6.1 PERIODIC MAINTENANCE

6.1.1 Check engine oil level:

Service Interval: Daily

a) Stop engine and wait for all moving parts to stop. Make sure machine is on a level surface.

b) Check with engine cold.

c) Clean area around dipstick. Remove dipstick and wipe oil off. Reinsert the dipstick. Do not screw into place. Remove dipstick and read the oil level.

d) If the oil level is low, fill to the “FULL” mark on the dipstick. Use oil as specified in Engine Owner’s Manual. ***Do Not*** overfill.

IMPORTANT: Do not operate the engine with the oil level below the “LOW” (or “ADD”) mark on the dipstick, or over the “FULL” mark.

6.1.2 Clean engine air cooling system:

Service Interval: See Engine Owner's Manual

⚠ CAUTION
POTENTIAL HAZARD ♦ Excessive debris can cause the engine and hydraulic system to overheat.
WHAT CAN HAPPEN ♦ Excessive debris around the engine and inside the transmission cooling compartment can create a fire hazard.
HOW TO AVOID THE HAZARD ♦ Clean all debris from around the engine and transmission daily.

a) Stop engine, wait for all moving parts to stop, and remove key.

b) Clean all debris from engine air intake screen and from around engine shrouding.

6.1.3 Clean transmission cooling compartment:

Service Interval: Daily

a) Stop engine, wait for all moving parts to stop, and remove key.

b) Clean all debris from screens that encompass cooling compartment, and then remove the compartment screen.

c) Clean all debris from the fan blades and the cooling fins for the transmission.

d) Replace the compartment screen.

6.1.4 Clean grass build-up under mower deck and check mower blades.

Service Interval: Daily

⚠ CAUTION
POTENTIAL HAZARD ♦ Raising the mower deck for service or maintenance relying solely on mechanical or hydraulic jacks could be dangerous.
WHAT CAN HAPPEN ♦ The mechanical or hydraulic jacks may not be enough support or may misfunction allowing the unit to fall, which could cause injury.
HOW TO AVOID THE HAZARD ♦ DO NOT rely solely on mechanical or hydraulic jacks for support. Use adequate jack stands or equivalent support.

a) Disengage PTO.

b) Raise deck using lift actuator.

c) Stop engine, wait for all moving parts to stop, and remove key.

d) Block up using proper safety precautions.

e) Clean out any grass build-up from underside of deck and in deck discharge chute.

f) Inspect blades and sharpen or replace as required.

g) If blade removal is necessary, be careful for the sharp cutting edges of the blades.

h) Re-install the blades (if they were removed) by placing a block of wood between the front or rear baffles and the blade then torquing the blade bolts to 115-120 ft. lbs. Be sure the spring disk washer cone is installed toward the bolt head (See Figure 5).

⚠ CAUTION
POTENTIAL HAZARD ♦ Operating a mower deck with loose or weakened blade bolts can be dangerous.
WHAT CAN HAPPEN ♦ A loose or weakened blade bolt could allow a blade rotating at a high speed to come out from under the deck, causing serious injury or property damage.
HOW TO AVOID THE HAZARD ♦ Replace the blade bolt after striking a foreign object. (Use only Exmark replacement parts PN 103-0862 – blade bolt and PN 103-0865 – spring disc washer). ♦ DO NOT lubricate the threads of the bolt or spindle before assembly. ♦ Torque the blade bolt to 115-120 ft. lbs.

i) Remove jack stands (or equivalent support) and lower deck to ground.

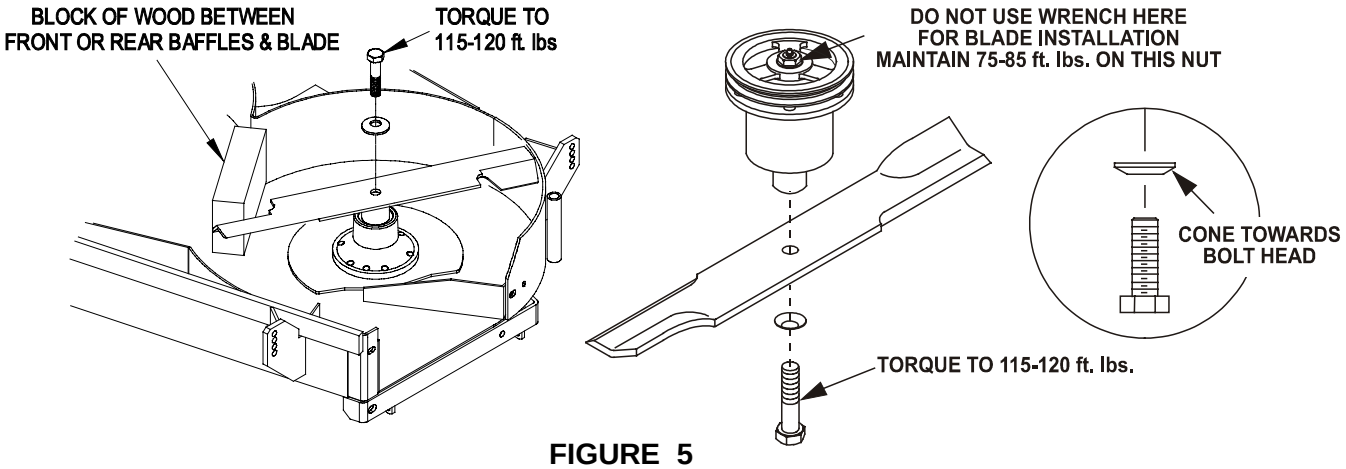

FIGURE 5
BLADE BOLT INSTALLATION

6.1.5 Check safety interlock system:

Service Interval: Daily

a) Check starting circuit. Starter ***should crank*** with operator *in* seat; parking brake *engaged*, and with PTO *disengaged.* Try to start with operator *out* of seat; parking brake *engaged*, and PTO *disengaged*; starter ***must not*** crank. Try to start with operator *in* seat, parking brake *disengaged* and PTO *disengaged*; starter ***must not*** crank. Try to start with operator *in* seat, parking brake *engaged* and PTO *engaged*; starter ***must not*** crank.

b) Check kill circuits: Run engine at one-third throttle with *PTO* and *parking brake disengaged*; lift yourself off the seat (but do not get off the machine) engine must stop after 1/2 second has elapsed.

c) Run engine at one-third throttle with *PTO* and *parking brake engaged*; lift yourself off the seat (but do not get off the machine) engine must stop after 1/2 second has elapsed.

d) If machine does not pass any of these tests, **Do Not** operate. Contact your authorized EXMARK Servicing Dealer or Distributor.

IMPORTANT: It is essential that all Operator Safety Mechanism be connected and in proper working condition prior to use for mowing.

6.1.6 Check for loose hardware:

Service Interval: Daily

a) Stop engine, wait for all moving parts to stop, and remove key.

b) Visually inspect machine for any loose hardware or any other possible problem. Tighten hardware or correct the problem before operating.

6.1.7 Service pre-cleaner element and air cleaner:

Service Interval: 25 hours

More often under Severe Conditions.

For Kohler units with standard air cleaner S/N 319,999 and lower:

a) Stop engine, wait for all moving parts to stop, and remove key.

b) Loosen wing nut and remove air cleaner compartment cover.

c) Remove foam pre-cleaner element and wash in warm water with detergent. Rinse until all traces of detergent are eliminated and squeeze out excess water ***(DO NOT wring).*** Air dry. Saturate with engine oil and squeeze out excess oil.

d) Check paper element. Gently tap the flat side of the paper element to dislodge any dirt. DO NOT wash or use pressurized air to clean paper element. Replace if dirty, bent or damaged.

e) Reinstall foam pre-cleaner to paper element

For Kohler units with canister type 2 stage air cleaner S/N 320,000 and higher:

a) Stop engine, wait for all moving parts to stop, and remove key.

b) Loosen retaining clips and remove air cleaner compartment cover.

c) Check paper element. Gently tap the paper element to dislodge any dirt. ***DO NOT*** wash or use pressurized air to clean paper element. Replace if dirty, bent or damaged.

d) Reinstall paper element. Position the cover so that the rubber dust ejector is pointing downward and secure with retaining clips.

6.1.8 Change engine oil:

Service Interval: See Engine Owner's Manual

NOTE: Change oil after first five (5) hours of operation, then refer to engine manual for future oil change frequencies.

a) Disengage PTO.

b) Raise mower deck to tilt the engine for draining.

c) Stop engine, wait for all moving parts to stop, and remove key.

d) Block up using proper safety precautions.

e) Drain oil while engine is warm from operation.

f) Oil drain is located on the left side of the engine. Place pan under machine to catch oil and remove plug or open valve with a 10 mm wrench. Allow oil to drain then replace plug or close valve.

g) Lower mower deck so that engine deck is level.

h) Replace the oil filter as per Engine Owner's Manual. Clean around oil filter and unscrew filter to remove. Before reinstalling new filter, apply a thin coating of oil on the surface of the rubber seal. Turn filter clockwise until rubber seal contacts the filter adapter then tighten filter an additional 2/3 to 3/4 turn.

i) Clean around oil fill cap and remove cap. Fill to specified capacity and replace cap. Use oil as directed in Engine Owner's Manual. **Do Not** overfill.

j) Start the engine and check for leaks. Stop engine and recheck oil level.

6.1.9 Check hydraulic oil level:

Service Interval: 40 hrs.

a) Make sure mower is on a level surface.

b) Stop engine, wait for all moving parts to stop.

c) Visually inspect the sight gauge on hydraulic tank. Oil level should be visible to top of sight gauge. If not, clean area around hydraulic reservoir cap, remove cap, and add oil as specified in Section 2.7 (Specifications). Replace cap.

⚠ **WARNING**
POTENTIAL HAZARD ♦ Hydraulic fluid escaping under pressure can penetrate skin and cause injury.
WHAT CAN HAPPEN ♦ Fluid accidentally injected into the skin must be surgically removed within a few hours by a doctor familiar with this form of injury or gangrene may result.
HOW TO AVOID THE HAZARD ♦ Make sure all hydraulic fluid hoses and lines are in good condition an all hydraulic connections and fittings are tight before applying pressure to hydraulic system. ♦ Keep body and hands away from pinhole leaks or nozzles that eject high pressure hydraulic fluid. ♦ Use cardboard or paper, not your hands, to find hydraulic leaks. ♦ Safely relieve all pressure in the hydraulic system by letting the foot pedal return to neutral and shutting off the engine before performing any work on the hydraulic system.

6.1.10 Check tire pressures:

Service Interval: 40 hrs.

a) Stop engine, wait for all moving parts to stop, and remove key.

b) Inflate tires to pressures specified in Section 2.8 (Specifications).

c) See Section 8.1 for further information.

6.1.11 Check battery charge:

Service Interval: Monthly

Allowing batteries to stand for an extended period of time without recharging them will result in reduced performance and service life. To preserve optimum battery performance and life, recharge batteries in storage when the open circuit voltage drops to 12.4 volts.

Note: To prevent damage due to freezing, battery should be fully charged before putting away for winter storage.

a) Check the voltage of the battery with a digital voltmeter. Locate the voltage reading of the battery in the table below and charge the battery for the recommended time interval to bring the charge up to a full charge of 12.6 volts or greater.

IMPORTANT: Make sure the negative battery cables are disconnected and the battery charger used for charging the battery has an output of 16 volts and 7 amps or less to avoid damaging the battery (see chart below for recommended charger settings).

Voltage Reading	Percent Charge	Maximum Charger Settings	Charging Interval
12.6 or greater	100%	16 volts/7 amps	No Charging Required
12.4 – 12.6	75 – 100%	16 volts/7 amps	30 Minutes
12.2 – 12.4	50 – 75%	16 volts/7 amps	1 Hour
12.0 – 12.2	25 – 50%	14.4 volts/4 amps	2 Hours
11.7 – 12.0	0 – 25%	14.4 volts/4 amps	3 Hours
11.7 or less	0%	14.4 volts/2 amps	6 Hours or More

For Serial Nos. 251,999 and Lower:

Check battery electrolyte level:

Service Interval: 40 hrs.

a) Stop engine and remove ignition key.

b) Remove battery cover.

c) Remove vent caps from battery. If needed, fill with water (distilled is recommended) to bottom of vent wells and replace vent caps.

d) See Section 3.2 (Assembly) for servicing a new battery.

6.1.12 Inspect Belt Wear:

Service Interval: 40 hrs.

a) Stop engine, wait for all moving parts to stop, and remove key.

b) Remove the three mower deck belt shields to check mower primary and secondary belt condition.

c) Look under engine deck to check the transmission drive belt condition.

d) Check all idler arms to be sure they pivot freely.

Note: Be sure to check idler on transmission drive belt. Disassemble, clean and grease pivot bushing if necessary.

6.1.13 Lubricate grease fittings.

a) Stop engine, wait for all moving parts to stop, and remove key.

b) Lubricate fittings with one to two pumps NGLI grade #2 multi-purpose gun grease**.** Refer to the following chart for fitting locations and lubrication schedule.

LUBRICATION CHART

FITTING LOCATIONS	INITIAL PUMPS	NO of PLACES	SERVICE INTERVAL
1. Front Caster Wheel hubs w/o zerk (FMD 524 & 604 units)	*0	2	Yearly
Front Caster Wheel hubs w/ zerk (FMD 523 & 603 units)	12	2	Daily
2. Front Caster Pivots (FMD 524 & 604 units)	*0	2	Yearly
Front Caster Pivots (FMD 523 & 603 units)	2	2	Daily
3. Drive Wheel Bearings	1	2	Monthly
4. Engine Deck Pivots	1	2	Weekly
5. Steering Column	1	1	Weekly
6. Idler Pivots, Mower Deck	1	2	Weekly
7. Rear Caster Wheel Bearings	1	1	Monthly

***** See 6.1.13 Section c) for special lubrication instructions on the front caster pivots and Section 6.1.14 for special lubrication instructions on the front caster wheel hubs.

No. 3 (Drive Wheel Bearings)
Located Under Engine Deck

No. 6 (Idler Pivots, Mower Deck)
Monthly disassemble belt and spring and grease under a "No Load" condition.

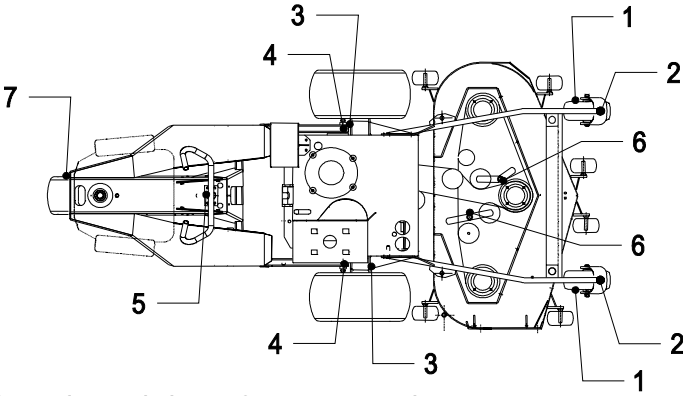

c) *For FMD 524 & 604 units only:* Lubricate front caster pivots once a year. Remove hex plug and cap. Thread grease zerk in hole and pump with grease until it oozes out around top bearing. Remove grease zerk and thread plug back in Place cap back on.

6.1.14 <u>Lubricate caster wheel hubs:</u>

<u>Service interval</u>: 40 hours for unit with grease zerks.
Once yearly for units without *grease zerks.*

a) Identify which type of caster wheel is installed on the unit. If there is a grease zerk on the caster wheel hub (FMD 523 and 603 units), lubricate fittings with one to two pumps of NGLI grade #2 multi-purpose gun grease. If there is no grease zerk (FMD 524 and 604), follow the instructions in steps b) through i).

b) Stop engine, wait for all moving parts to stop, and remove key.

c) Disassemble the caster wheels, pry out seals, and inspect bearings for wear or damage and replace if necessary.

d) Pack the bearings with NGLI grade #2 multi-purpose gun grease.

e) Insert (1) bearing, (1) new seal, and (1) bearing spacer.

NOTE: Seals (Exmark PN 103-0063) must be replaced.

f) Insert the caster spacer.

g) With open end of wheel up, fill area inside wheel around caster spacer with gun grease.

h) Insert the second (1) bearing, (1) new seal, and (1) bearing spacer.

i) Put wheel and tire assembly on the unit and adjust by tightening the nyloc nut until wheel will not turn freely. Back nut off 1/6 of a turn so the wheel will just turn with a slight amount of drag.

IMPORTANT: To prevent seal and bearing damage, check the bearing adjustment often. Spin the caster tire. The tire should not spin freely (more than 1 to revolution) or have any side play. If the wheel spins freely adjust per step i).

6.1.15 Remove engine shrouds and clean cooling fins:

Service Interval: See Engine Owner's Manual

a) Stop engine, wait for all moving parts to stop, and remove key.

b) Remove cooling shrouds (or cooling shroud cleanout covers for S/N 320,000 and higher) from engine and clean cooling fins. Also clean dust, dirt, and oil from external surfaces of engine, which can cause improper cooling.

c) Make sure cooling shrouds or cooling shroud cleanout covers are properly reinstalled. Operating the engine without cooling shrouds or cooling shroud cleanout covers will cause engine damage due to overheating.

6.1.16 Change fuel filter:

Service Interval: As Required

a) A fuel filter is installed in the fuel line between the fuel tank and the engine. Replace with **Kohler P/N 2405002** when necessary.

6.1.17 Lubrication of steering yoke pivot:

Service Interval: Monthly

a) The steering yoke pivot is permanently sealed and should require no additional lubrication. If there is evidence of seal leakage, replace the seals or bearings and fill with SAE No. 2 multi-purpose grease or wheel bearing grease.

6.1.18 Check spark plugs.

Service Interval: 160 hrs.

a) Remove spark plugs, check condition and adjust plug gap, or replace with new plugs. See Engine Owners Manual.

6.1.19 Change hydraulic system oil or filter:

6.1.19.1 Change hydraulic filter:

Service Interval: After first 250 hrs, then yearly thereafter.

a) Stop engine, wait for all moving parts to stop, and remove key.

b) Carefully clean area around filter. It is important that no dirt or contamination enters the hydraulic system.

c) Unscrew filter and remove.

IMPORTANT: Before reinstalling new filter, fill it with Mobil 1 15W-50 and apply a thin coat of oil on the surface of the rubber seal. Turn filter clockwise until rubber seal contacts the filter adapter, and then tighten the filter an additional 2/3 to 3/4 turn. Use only Exmark (Part No. 1-513211) or Eaton (Part No. 103144) filter elements.

d) Start engine and run several minutes.

g) Check hydraulic oil level as outlined in 6.1.9.

6.1.19.2 Change hydraulic oil:

Service Interval: Yearly

a) Stop engine, wait for all moving parts to stop, and remove key.

b) Carefully clean area around small fitting under oil reservoir. Loosen clamp, remove hose, and allow oil to drain from reservoir. It is important that no dirt or contamination enters the hydraulic system. Reinstall hose and tighten clamp.

c) Clean around reservoir cap and Refill reservoir to center of sight gauge with Mobil “1” 15W-50.

d) Start engine and run several minutes.

e) Recheck hydraulic oil level as outlined in 6.1.9. Do not attempt to drain all oil in hydraulic system (except what drains out of the filter or reservoir when changing filter or hydraulic oil); unless it is felt that the oil has been contaminated or becomes extremely hot. **Changing oil unnecessarily, could damage the hydraulic system by introducing contaminates into the system.**

6.1.20 Inspect Electric clutch gap:

Service Interval: 250 hrs.

Refer to Section 6.2.12 for inspection and adjustment procedures.

6.1.21 Refer to the Engine Owner’s Manual for detailed maintenance required for servicing the engine.

6.1.22 Wheel hub, slotted nut torque specification.

a) Tighten the slotted nut on the transaxle tapered shaft and torque to 100 ft. lbs.

b) After proper torque has been applied, turn the nut until the next set of slots lines up with the cross hole in the shaft.

c) Replace cotter pin.

NOTE: Do not use anti-seize compound on the wheel hub.

6.1.23 Thread locking adhesives such as "Loctite 242" or "Fel-Pro Pro-Lock, Nut-Type" are used on the following fasteners:

a) Bolt which mounts blade drive clutch to engine crankshaft.

b) Transaxle drive shaft pillow block bearing setscrews.

c) Bolts which attach transaxle to lower stabilizer bracket.

6.1.24 An anti-seize compound on the following locations:

a) Between the pillow block bearings and the transaxle shafts.

6.1.25 Dielectric grease is used on all blade type electrical connections to prevent corrosion and loss of contact.

6.2 ADJUSTMENTS

IMPORTANT: Disengage PTO, shut off engine, wait for all moving parts to stop, and remove key before servicing, cleaning or making any adjustments.

6.2.1 Cutting height and anti-scalp roller adjustment.

a) Stop engine, wait for all moving parts to stop, and remove key.

b) Install hairpin clips in the holes shown in Figure 6 for the desired cutting height.

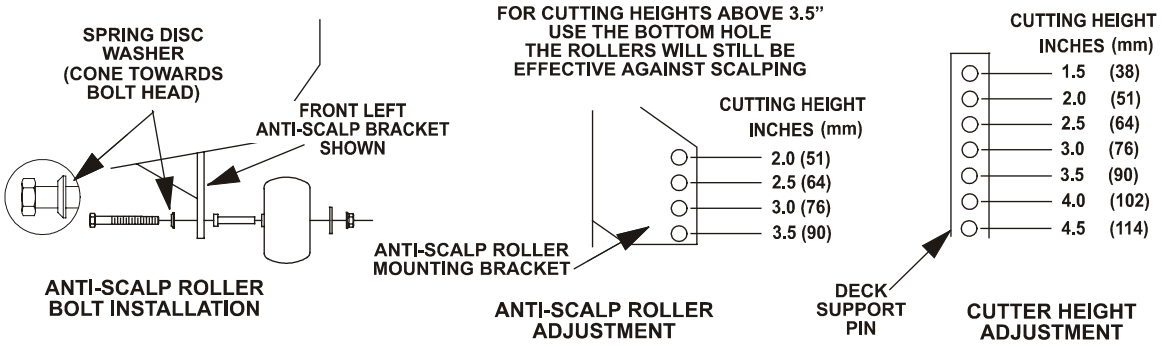

FIGURE 6
CUTTING HEIGHT ADJUSTMENT
ANTI-SCALP ROLLER ADJUSTMENT

c) Adjust anti-scalp rollers for Normal Operating Conditions. Place rollers in one of the positions shown in Figure 6. Rollers will maintain 3/4 in. (19 mm) clearance to the ground to minimize gouging and roller wear or damage.

For maximum deck flotation, place rollers one hole position lower. Rollers should maintain 1/4 in. (6.4 mm) clearance to ground. **Do Not** adjust rollers to support the deck. Be sure roller bolts and nuts are installed with the spring disc washer between head of bolt and mounting bracket.

d) When operating in extremely rough conditions it may be necessary to position the anti-scalp rollers one or two holes higher than described in "b" to prevent damage to the rollers and/or bolt failure (See Figure 6).

NOTE: When anti-scalp rollers are placed in these positions, reduced deck flotation will result.

6.2.2 Transmission drive belt tension adjustment: No adjustment necessary.

6.2.3 Mower deck drive belt: No adjustment necessary.

6.2.4 Blade drive belt tension. No adjustment necessary.

6.2.5 Neutral Centering Adjustment

a) The Neutral Centering Device adjustment should be made with the engine running at full throttle. First raise and securely block up the frame so that the drive wheels can rotate freely without contacting the ground.

⚠ WARNING
POTENTIAL HAZARD ♦ Engine must be running and drive wheels must be turning so motion control adjustment can be performed.
WHAT CAN HAPPEN ♦ Contact with moving parts or hot surfaces may cause personal injury.
HOW TO AVOID THE HAZARD ♦ Keep fingers, hands, and clothing clear of rotating components and hot surfaces.

⚠ CAUTION
POTENTIAL HAZARD ♦ Raising the tractor frame for service or maintenance relying solely on mechanical or hydraulic jacks could be dangerous.
WHAT CAN HAPPEN ♦ The mechanical or hydraulic jacks may not be enough support or may misfunction allowing the unit to fall, which could cause injury.
HOW TO AVOID THE HAZARD ♦ DO NOT rely solely on mechanical or hydraulic jacks for support. Use adequate jack stands or equivalent support.

b) Remove the electrical connection from the parking brake safety switch located on the right- hand underside at the front of the engine deck. Temporarily install a jumper wire across the terminals in the connector of the wiring harness.

c) Release brake lever.

d) The Neutral Centering Device is located on the right-hand underside of the engine deck. Loosen jam nut (d) from the ball joint which connects the override assembly (f), to the engine deck anchor mounting (See Figure 6).

e) Start engine. Operator must be in seat to crank engine. Open to full throttle.

f) Adjust neutral centering device length by rotating the neutral centering device barrel clockwise or counterclockwise until wheels stop turning or no longer creep. Tighten jam nut.

g) Remove jumper and reconnect electrical connection to parking brake safety switch.

h) Check safety interlock system as outlined in Section 6.1.5.

IMPORTANT: Keep clear of wheels and other moving parts when making these adjustments.

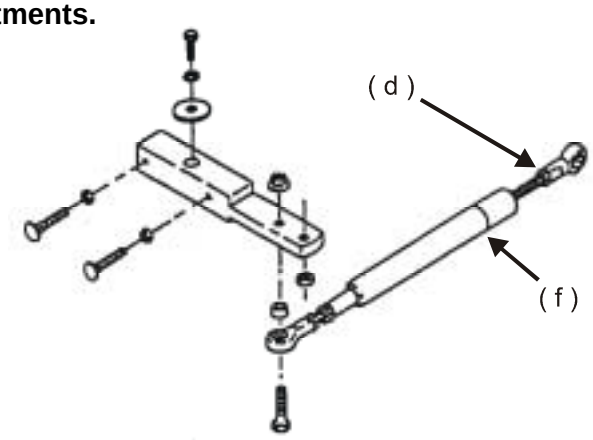

FIGURE 7
NEUTRAL CENTERING DEVICE ADJUSTMENT

6.2.6 Parking Brake Quadrant Adjustment

a) Stop engine, wait for all moving parts to stop, and remove key.

b) Loosen the two 5/16 x 18 screws (a), that clamp the brake quadrant to the engine deck.

c) Pull parking brake lever towards the operator to the brake “on” position (b).

d) Check linkage to ensure that they butt up against the over-centering stop bolt (c), and retighten the two 5/16-18 screws (See Figure 8).

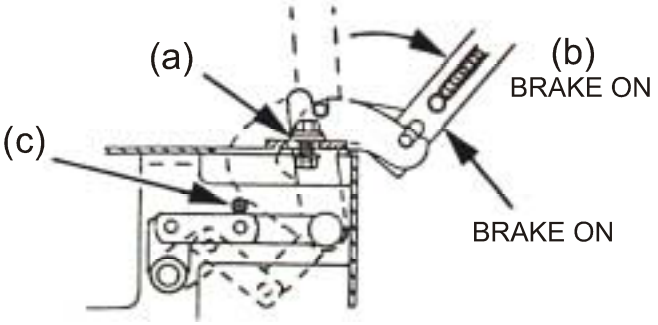

FIGURE 8
PARKING BRAKE QUADRANT ADJUSTMENT

6.2.7 Parking Brake Spring Adjustment

a) Stop engine, wait for all moving parts to stop, and remove key.

b) Check the pin to pin length and adjust to 11 5/8” as required.

c) Check the compression spring length and adjust to 3 1/32” as required (See Figure 8).

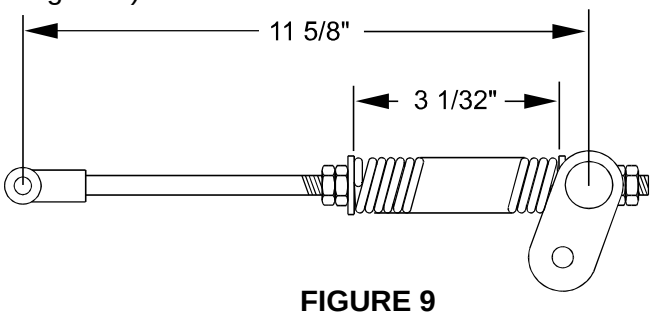

FIGURE 9
BRAKE CONTROL LINK AND SPRING ADJUSTMENT

6.2.8 Parking Brake Neutral Lockout Adjustment.

a) Stop engine, wait for all moving parts to stop, and remove key.

b) Remove inlet screen and fan.

c) Engage parking brake. Loosen the jam nuts securing the two 5/16 x 1-1/2” carriage bolts to the hydro control arm. Be sure the hydro control arm is in the neutral position as outlined in the previous adjustment (6.2.5) and the parking brake is adjusted as per previous adjustment (6.2.6).

d) Adjust two 5/16 x 1-1/2” carriage bolts in the hydro control arm in or out until the head contacts the butterfly plate, and then tighten jam nuts (See Figure 9).

NOTE: When the bolts are properly adjusted, there will be no rotational movement of the hydro control arm when brake is engaged.

e) Restart engine and open to full throttle.

f) Step down on the forward pedal, then the rear pedal of the motion control pedal. Listen for a "whine" from the hydro transaxle. If any "whine" is heard during any of the above conditions, repeat adjustment steps “c”, “d” and “e”.

g) Replace fan and inlet screen.

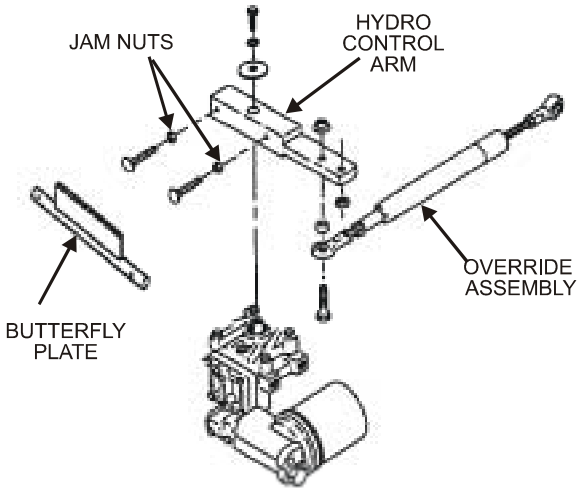

FIGURE 10
PARKING BRAKE NEUTRAL LOCKOUT ADJUSTMENT

6.2.9 Parking brake switch adjustment

a) Stop engine, wait for all moving parts to stop, and remove key.

b) Engage parking brake. Adjust the parking brake switch mounting bracket until jack-shaft engagement arm depresses brake safety switch by at least 1/4".

c) Check safety interlock system as outlined in 6.1.5.

6.2.10 Motion Control Linkage Adjustment

a) Step down on the forward pedal until it touches the footrest.

b) Check the gap between the motion override tube and the spacer. This gap should measure 1/16" (See Figure 11).

c) If adjustment is required, remove clevis pin at foot pedal end and turn yoke in or out as required to obtain the 1/16" gap.

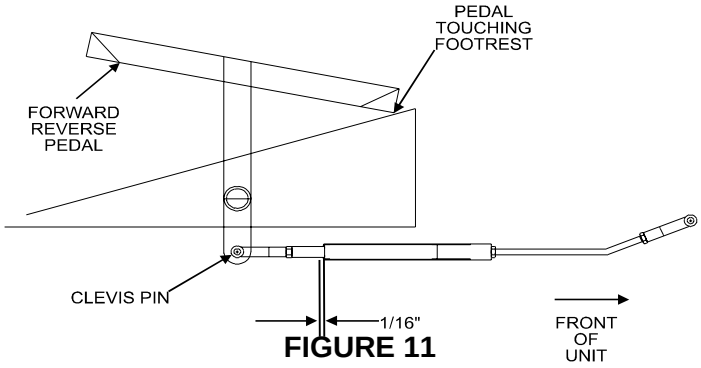

FIGURE 11
MOTION CONTROL LINKAGE ADJUSTMENT

6.2.11 Seat Switch Adjustment

a) Stop engine, wait for all moving parts to stop, and remove key.

b) With operator out of seat, adjust the seat switch to provide a 1/16" clearance between the switch plunger and the seat frame (See Figure 12).

c) To adjust, loosen the top nut securing the seat switch to the seat rail weldment. Adjust the bottom nut until the 1/16" between plunger and seat frame has been obtained. Tighten the top nut. Recheck the measurement and adjust again if necessary.

d) Check safety interlock system as outlined in 6.1.5.

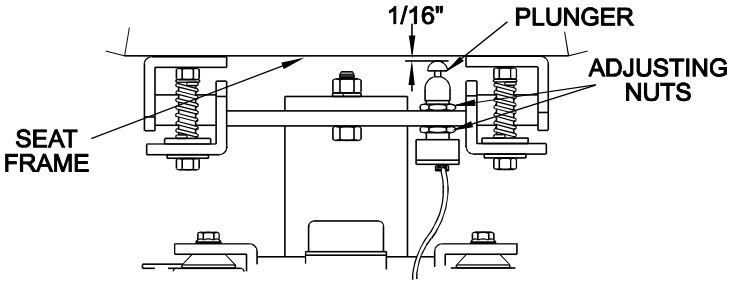

FIGURE 12
SEAT SWITCH ADJUSTMENT

6.2.12 Electric Clutch Adjustment

a) Stop engine, wait for all moving parts to stop, and remove key.

b) Engage parking brake.

c) Place .015-.021 inch feeler gauge through each of the three clutch gap holes. If gap exceeds this range, tighten the three adjusting nuts (c) until the proper gap is obtained (See Figure 13). The three clutch gap holes are located at the “nut side” of the adjusting bolts. The adjusting bolts can be identified by the springs surrounding each bolt.

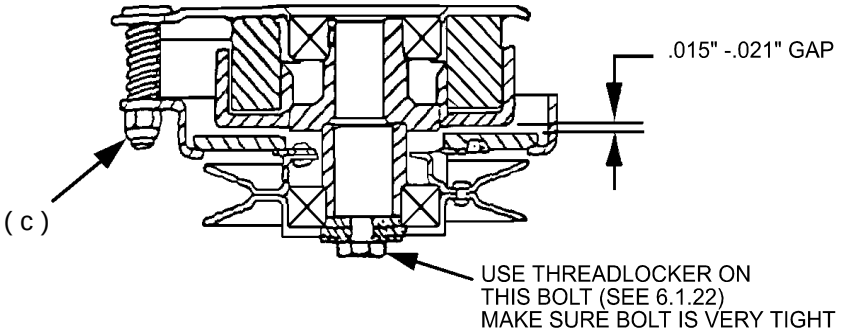

FIGURE 13
ELECTRIC CLUTCH ADJUSTMENT

6.2.13 Steering Chain Adjustment

a) Stop engine, wait for all moving parts to stop, and remove key.

b) Position the steering handle bar so that it points the unit straight forward (the rear steering wheel should be in line with the rider main frame channel).

c) Check to see if the chains are loose.

d) To take up slack in the chains, loosen the rear jam nuts connecting the eyebolts to cross link bars, then equally tighten each forward jam nut until slack is taken up. Retighten the forward jam nuts onto the links.

e) If the unit tends to turn left when handle bar is positioned for straight forward travel, adjust by shortening the right hand link (threading jam nuts *closer* to “eye” end of the eyebolt) and lengthening the left hand link (threading jam nuts *away* from the “eye” end of the eyebolt) an equal amount. Re check chain tension.

f) If the unit tends to turn right when handle bar is positioned for straight forward travel, reverse procedure as stated in paragraph “d” above.

6.2.14 Throttle Control Adjustment

a) Stop engine, wait for all moving parts to stop, and remove key.

b) Loosen the cable clamp on the engine and position the throttle control at the control console within 1/4” (6mm) from the upper end of the slot. Pull on cable assembly at lower end, where it attached to the engine, until the throttle control arm contacts the stop screw. Secure cable with cable clamp.

6.2.15 Throttle Cable Tension

a) Stop engine, wait for all moving parts to stop, and remove key.

b) Tension in throttle lever can be adjusted by adjusting the tightness of the lever pivot bolt, which is located under the console.

6.2.16 Seat armrest adjustment.

a) Lift armrest on seat. Locate square tab marked with the numbers 1 through 4. Rotate square tab 1/4 turn to raise or lower the armrest in approximately 1/4" increments. See Figure 14.

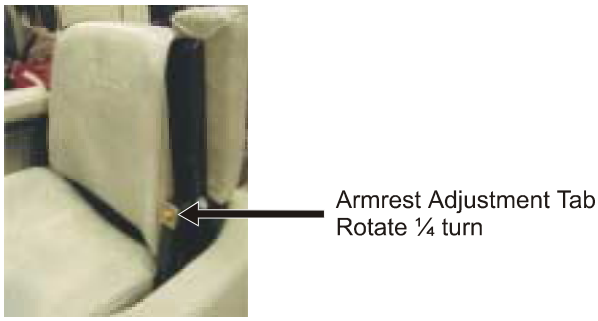

FIGURE 14
ARMREST ADJUSTMENT

7. WASTE DISPOSAL

7.1 MOTOR OIL DISPOSAL.

Engine oil and hydraulic oil are both pollutants to the environment. Dispose of used oil at a certified recycling center or according to your state and local regulations.

7.2 BATTERY DISPOSAL

⚠ DANGER
POTENTIAL HAZARD ♦ Battery electrolyte contains sulfuric acid, which is poisonous and can cause severe burns
WHAT CAN HAPPEN ♦ Swallowing electrolyte can be fatal or if it touches skin can cause severe burns.
HOW TO AVOID THE HAZARD ♦ Wear safety glasses to shield eyes, and rubber gloves to protect skin and clothing when handling electrolyte. ♦ Do not swallow electrolyte.

Federal law states that batteries should not be placed in the garbage. Management and disposal practices must be within relevant federal, state, or local laws.

If a battery is being replaced or if the unit containing the battery is no longer operating and is being scrapped, take the battery to a local certified recycling center. If no local recycling is available return the battery to any certified battery reseller.

8. TROUBLE SHOOTING

8.1 MOWER CUTS UNEVENLY.

a) Check air pressure in tires. See Section 2.8. A more uniform cutting height may be obtained with higher tire pressure on rough terrain. A lower tire pressure provides more flotation.

b) Check deck support pins. Hairpin clips must be in the same hole on each support pin.

c) Check blades tip to tip for straightness. Blades should be within 3/16" or one blade width from being in line.

8.2 ENGINE WILL NOT START.

a) Check that throttle control is midway between “slow” and “fast” positions, and choke is in “on” position for a cold engine or “off” position for a warm engine.

b) Be sure there is fuel in the tank and that the fuel valve is open.

c) Operator must be in the seat.

d) Check that parking brake is set.

e) Be sure that the blades are disengaged.

f) Check that the spark plug wires are properly connected.

g) Look for loose or faulty wiring connections.

h) Check for corrosion at all wiring connections. Even minor corrosion may cause a faulty connection. Clean connector terminals thoroughly and reconnect.

I) Check that the seat switch is properly adjusted. See Section 6.2.11.

j) Check that the parking brake switch is properly adjusted. See Section 6.2.9.

NOTE: After carefully checking the above steps, attempt to start the engine. If it does not start, contact your authorized Exmark service dealer or distributor.

IMPORTANT: It is essential that all Operator Safety Mechanisms be connected and in proper operating conditions prior to the use of the mower.

ENGINE TROUBLESHOOTING

When a problem occurs, do not overlook the simple causes. For example, starting problems could be caused by an empty fuel tank. The following tables list some common causes of troubles. Do not attempt to service or replace major items or any items that call for special timing or adjustment procedures (governor, valves, etc.). Have this work done by your Engine Service Dealer.

ENGINE TROUBLESHOOTING TABLE

PROBLEM	NO FUEL	IMPROPER FUEL	DIRT IN FUEL LINE	DIRTY AIR FILTER	FAULTY SPARK PLUG	ENGINE OVERLOADED	BLOCKED FUEL FILTER	INCORRECT OIL LEVEL	DIRTY AIR SCREEN
Will not start	X		X	X	X	X	X		
Hard starting	X	X	X	X	X	X	X		
Stops suddenly	X		X	X		X	X	X	X
Lacks power		X	X	X	X	X	X	X	X
Operates erratically		X	X	X	X	X	X		X
Knocks or pings		X				X			X
Skips or misfires		X	X	X	X				X
Backfires			X	X	X	X			X
Overheats			X	X		X		X	X
High fuel consumption				X	X	X			X

9. WIRING DIAGRAMS

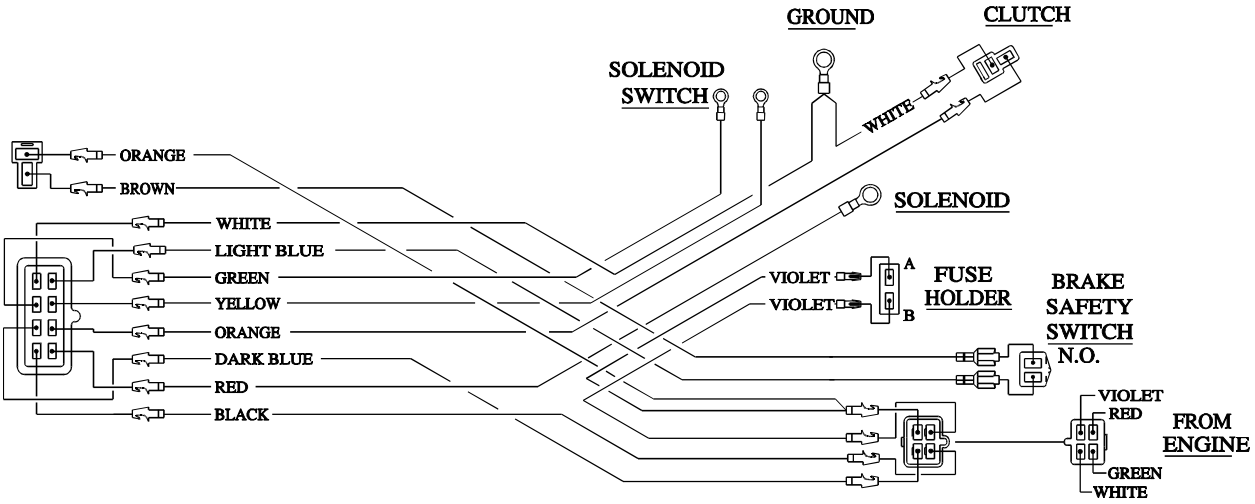

Engine Deck Wiring Diagram

Note: All connectors are viewed from the **wire input** side of the connector.
N.O. = Normally Open

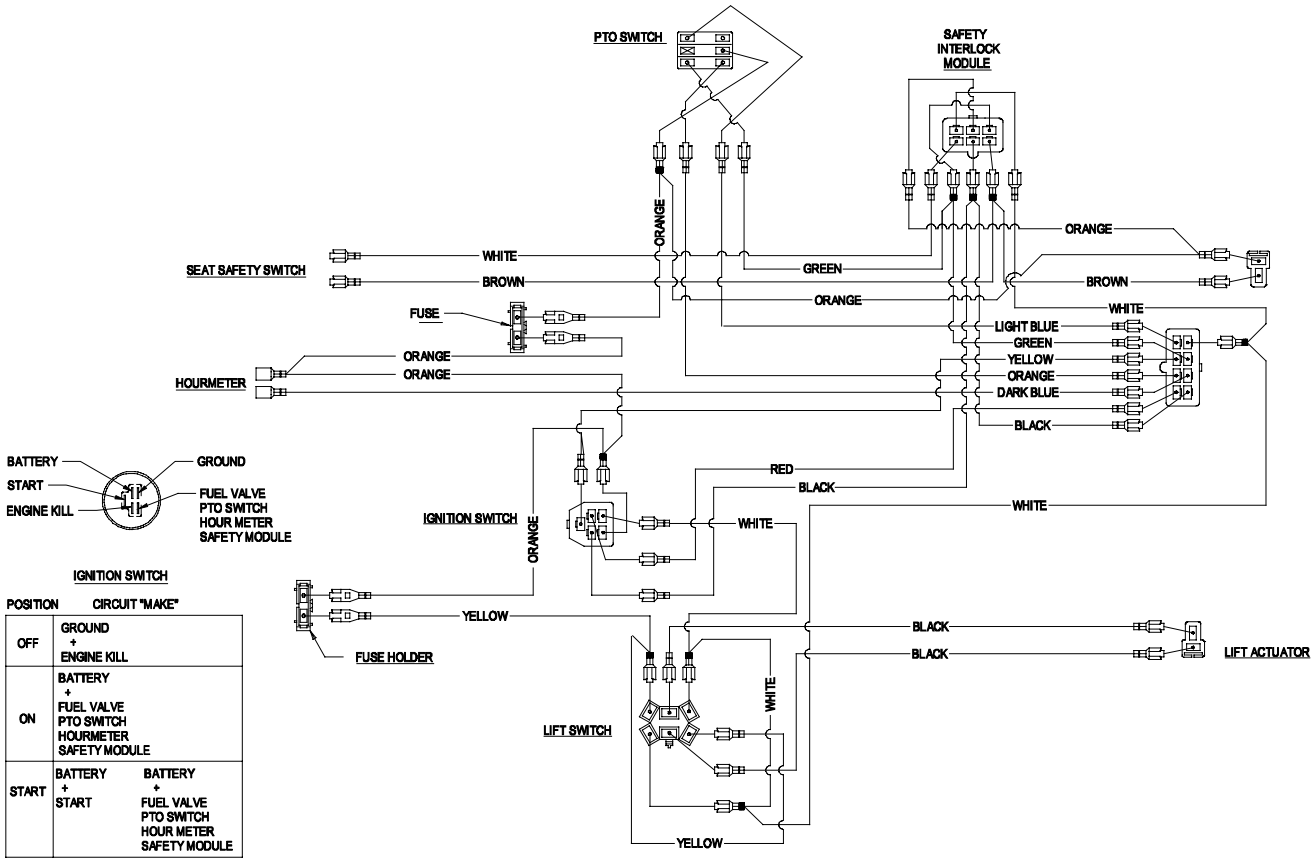

IGNITION SWITCH

POSITION	CIRCUIT "MAKE"
OFF	GROUND + ENGINE KILL
ON	BATTERY + FUEL VALVE PTO SWITCH HOURMETER SAFETY MODULE
START	BATTERY + START BATTERY + FUEL VALVE PTO SWITCH HOUR METER SAFETY MODULE

Console Wiring Diagram

Note: All connectors are viewed from the **wire input** side of the connector.
N.O. = Normally Open

10. WARRANTY

Limited Warranty
Exmark Commercial Turf Equipment

Exmark Mfg. Co. Inc. and its affiliate, Exmark Warranty Company, pursuant to an agreement between them, jointly warrant on the terms and conditions herein, that we will repair, replace or adjust any part manufactured by Exmark and found by us (in the exercise of our reasonable discretion) to be defective in factory material or workmanship.

This warranty is limited to one year from the date of original retail purchase (90 days for rental use) for any Exmark mower that is used for commercial or any other income producing purpose. The blade spindle assemblies will be warranted for three years, one year parts and labor with an additional two years parts only, from date of original retail purchase against defects in materials or workmanship. The frame and hydrostatic traction drive system, excluding hoses, will be warranted for two full years from date of original retail purchase against defects in materials or workmanship. We will extend the Peerless 5-speed transmission manufacturer's warranty from 90 days to one year. Belts and tires are warranted for 90 days against defects in materials or workmanship.

The engine warranty is covered by its respective engine manufacturer. Please refer to the engine manufacturers warranty statement that is included in the literature packet. We are not authorized to handle warranty adjustments on engines. Engine warranties should be referred to the nearest authorized service outlet of the engine manufacturer.

This warranty extends only to the original retail purchaser of the equipment. This warranty may not be assigned or transferred without the prior express written consent of Exmark and Exmark Warranty Company. The warranty period commences upon the date of the original retail purchase.

The Exmark turf equipment, including any defective part, must be returned to an authorized Exmark service dealer within the warranty period. The warranty shall extend to the expense of repair or replacement (as determined by us) of the defective part, including labor. The warranty shall not extend to the expense of delivering the mower to the dealer for warranty work nor the expense of returning it back to the owner after repair or replacement. Our responsibility in respect to claims is limited to making the required repairs or replacements, and no claim of breach of warranty shall be cause for cancellation or rescission of the contract of sale of any Exmark mower. Proof of purchase may be required by the dealer to substantiate any warranty claim. All warranty work must be performed by an authorized Exmark service dealer.

This warranty extends only to turf equipment operated under normal conditions and properly serviced and maintained. The warranty expressly does not cover: (i) any damage or deterioration due to normal use, wear and tear, or exposure; (ii) normal maintenance services, such as oil change, cleaning, lubrication; adjustment; (iii) replacement of service items, such as oil, lubricants, spark plugs, or other items subject to normal service replacement; (iv) damage or defects arising out of or relating to misuse, neglect, alteration, negligence or accident; (v) repair or replacement arising from operation of or use of the turf equipment which is not in accordance with operating instructions as specified in the operator's manual or other operational instructions provided by Exmark; (vi) repair or replacement arising as a result of any operation from turf equipment that has been altered or modified so as to, in the determination of Exmark or Exmark Warranty Company, adversely affect the operation, performance or durability of the equipment or that has altered, modified or affected the turf equipment so as to change the intended use of the product; (vii) repair or replacement necessitated by use of parts, accessories or supplies, including gasoline, oil or lubricants, incompatible with the turf equipment or other than as recommended in the operator's manual or other operational instructions provided by Exmark; (viii) repairs or replacements resulting from parts or accessories which have adversely affected the operation, performance or durability of the turf equipment; or (ix) damage or defects due to or arising out of repair of turf equipment by person or persons other than an authorized Exmark service dealer or the installation of parts other than genuine Exmark or Exmark recommended parts.

As a condition to this warranty, customer shall have read the operator's manual and shall have completed and returned to Exmark Warranty Company, within the prescribed time, the Exmark warranty registration.

The sole liability of Exmark and Exmark Warranty Company with respect to this warranty shall be repair and replacement as set forth herein. Neither Exmark nor Exmark Warranty Company shall have any liability for any other cost, loss or damage, including but not limited to, any incidental or consequential loss or damage. In particular, we shall have no liability or responsibility for: (i) expenses relating to gasoline, oil or lubricants; (ii) loss, cost or expense relating to transportation or delivery of turf equipment from the location of owner or location where used by owner to or from any authorized Exmark service dealer; (iii) travel time, overtime, after hours time or other extraordinary repair charges or charge relating to repairs or replacements outside of normal business hours at the place of business of the authorized Exmark service dealer; (iv) rental of like or similar replacement equipment during the period of any warranty, repair or replacement work; (v) any telephone or telegram charges or travel charges; (vi) loss or damage to person or property other than that covered by the terms of this warranty; (vii) any claims for lost revenue, lost profit or additional cost as a result of a claim of breach of warranty; or (viii) attorney's fees.

There are no representations or warranties which have been authorized and provided to the buyer of the turf equipment, other than as set forth in this warranty. Any and all statements or representations made by any seller of this equipment, including those set forth in any sales literature or made orally by any sales representative, are superseded by the terms of this warranty. Any affirmation of fact or promise made by Exmark, Exmark Warranty Company or any of their representatives to the buyer which relates to the goods that are the subject of this warranty shall not be regarded as part of the basis of the bargain and shall not be deemed to create any express warranty that such goods shall conform to the affirmation or promise.

THERE ARE NO UNDERSTANDINGS, AGREEMENTS, REPRESENTATIONS, OR WARRANTIES, EXPRESS OR IMPLIED (INCLUDING BUT NOT LIMITED TO ANY REGARDING THE MERCHANTABILITY OR FITNESS FOR A PARTICULAR PURPOSE), NOT SPECIFIED HEREIN, RESPECTING THE EQUIPMENT WHICH IS THE SUBJECT OF THIS WARRANTY.

This warranty applies to all Exmark turf equipment sold in the United States and Canada and intended to be used for commercial purposes.

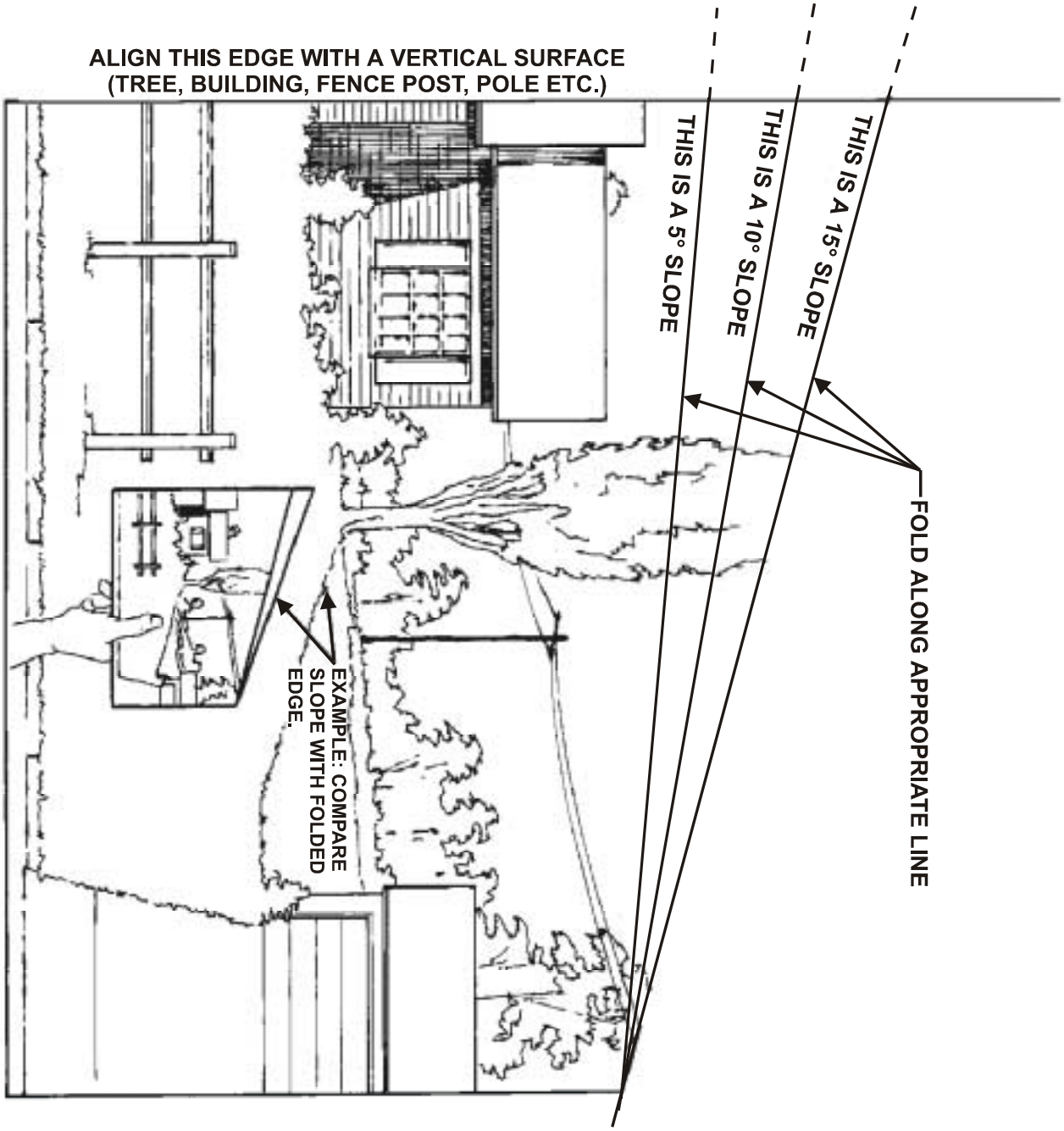
FOLD ALONG APPROPRIATE LINE
THIS IS A 15° SLOPE
THIS IS A 10° SLOPE
THIS IS A 5° SLOPE
EXAMPLE: COMPARE SLOPE WITH FOLDED EDGE.
ALIGN THIS EDGE WITH A VERTICAL SURFACE (TREE, BUILDING, FENCE POST, POLE ETC.)

SEE EXMARK'S COMPLETE LINE OF PRODUCTS FOR TURF CARE

LAZER Z®	LAZER Z® HP
LAZER Z® XP	TURF RANGER®
TURF TRACER®	TURF TRACER® HP
METRO®	METRO® HP
VIKING HYDRO	ULTRA VAC™
GRASS CATCHER	SELF STEERING SULKY

MICRO-MULCH ™ ACCESSORY

⚠ WARNING

The engine exhaust from this product contains chemicals known to the State of California to cause cancer, birth defects, or other reproductive harm.

©1997 – 2001
EXMARK MFG. CO. INC.
ALL RIGHTS RESERVED

PART NO. 103-1786

INDUSTRIAL PARK BOX 808
BEATRICE, NE 68310
(402) 223-6300
FAX (402) 223-5489

PRINTED IN U.S.A.

eXmark® MFG. CO. INC.